EAST WINDSOR
MUNICIPAL UTILITIES AUTHORITY
MERCER COUNTY, NEW JERSEY

WATER MAIN REPLACEMENT
HUNTINGTON DRIVE

Board Members

Linda Moore - Chairperson
Marc Lippman - Vice-Chairperson
Leonard J. Millner - Treasurer
Marc Platizky - Secretary
Steven A. Kurs - Asst. Secretary/Treasurer
William P. Lawler - 1st Alternate
Michael Shifman - 2nd Alternate

Richard Brand - Executive Director
Todd Fryer - Business/Development Manager

May 2019

Earl C. Schneider

Digitally signed by Earl Schneider
Date: 2019.05.22 16:58:42 -04'00'

Earl C. Schneider
Professional Engineer - NJ Lic. No. 39397

MOTT MACDONALD

497
012007-NF

EAST WINDSOR MUNICIPAL UTILITIES AUTHORITY
MERCER COUNTY, NEW JERSEY

WATER MAIN REPLACEMENT - HUNTINGTON DRIVE

CONTRACT NO. 2018-01
NOTICE TO BIDDERS

NOTICE is hereby given that sealed bids will be received by the East Windsor Municipal Utilities Authority (hereinafter called the "Owner") for:

WATER MAIN REPLACEMENT - HUNTINGTON DRIVE
CONTRACT NO. 2018-01

Sealed bids for the above named Contract, which comprises the replacement of water mains for the East Windsor Municipal Utilities Authority, East Windsor, New Jersey ("Owner"), will be received at the East Windsor Municipal Utilities Authority Administration Building, 7 Wiltshire Drive, East Windsor, New Jersey 08520 on **Wednesday, June 26, 2019, at 10:00 a.m.** prevailing time, at which time they will be publicly unsealed and the contents publicly announced.

The work includes the furnishing of all labor, materials and equipment necessary to complete the work as shown on the Drawings and as described in the Specifications. The work consists of replacing approximately 4,700 linear feet of existing 4-inch and 6-inch ductile iron main with new 10-inch and 8-inch High Density Polyethylene Pipe (HDPE) water main. The work is located along Huntington Drive and adjoining streets within East Windsor Township. The work also consists of the milling and repaving in association with the water main replacement and restoration of affected grass and sidewalk areas as shown on the plans. The work shall be completed within 150 calendar days of the Contractor's receipt of written Notice to Proceed.

No bid will be received unless in writing on the forms furnished, and unless accompanied by bid security in the form of a bid bond, cashier's check, or a certified check made payable to the East Windsor Municipal Utilities Authority in an amount equal to 10% of the amount of the total bid, but not exceeding $20,000.

The bid shall be accompanied by a Certificate of Surety on the form included in the Contract Documents, from a surety company licensed to do business in the State of New Jersey, which shall represent that the surety company will provide the Contractor with the required bonds in the sums required in the Contract Documents and in a form satisfactory to the Owner's Attorney and in compliance with the requirements of law.

Bidders must use the prepared bid form which is contained in the Contract Documents. Each individual proposal must be separately enclosed in a sealed envelope addressed to the **East Windsor Municipal Utilities Authority, 7 Wiltshire Drive, East Windsor, New Jersey 08520** marked on the outside with the number of the contract(s) and name of the project being bid on.

A Pre-Bid Conference will be held at the East Windsor Municipal Utilities Authority Administration Building, 7 Wiltshire Drive, East Windsor, New Jersey 08520, on **June 5, 2019, at 10:00 a.m.** Contractors are strongly encouraged to attend the Pre-Bid Conference.

No bids will be received after the time and date specified, and no bids will be received by mail. Bids shall be received by courier service (date and time recorded) or shall be hand delivered. The Owner shall award the Contract or reject all bids within 60 days of bid opening, except that the bids of any bidders who consent thereto may, at the request of the Owner, be held for consideration for such longer period as may be agreed.

The Owner will evaluate bids and any award will be made to the lowest, responsive, responsible bidder in accordance with N.J.S.A. 40A:11-16(c). The Owner reserves the right to reject any or all bids and to waive minor informalities or irregularities in bids received.

The qualification and reclassification of bidders will be subject to the statutory provisions contained in N.J.S.A. 40A:11-25 to 32 ("Local Public Contract Law").

All bid security except the security of the three apparent lowest responsible bidders shall be returned, unless otherwise requested by the bidder, within ten (10) days after the opening of the bids, Sundays and holidays excepted, and the bids of the bidders whose bid security is returned shall be considered withdrawn.

Each bidder must submit with his bid a signed certificate stating that he owns, leases or controls all the necessary equipment required to accomplish the work shown and described in the Contract Documents. Should the bidder not be the actual owner or leasee of such equipment, his certificate shall state the source from which the equipment will be obtained and, in addition, shall be accompanied by a signed certificate from the owner or person in control of the equipment definitely granting to the bidder the control of the equipment required during such time as may be necessary for the completion of that portion of the Contract for which it is necessary. The bidder shall comply with the documentation requirements set forth in the Article of the Information for Bidders, entitled, "Bidder Submissions".

The successful bidder will be required to submit bonds and proof of insurance on or before execution of their respective Contracts as explained in the Contract Documents.

Bidders are required to comply with all relevant Federal and State Statutes, Rules and Regulations including but not limited to the applicable provisions of Title VI of the Civil Rights Act of 1964, as amended (42 USC 2000d-2000D-4A), the discrimination and affirmative action provisions of N.J.S.A. 10:2-1 through 10:2-4, the New Jersey Law against Discrimination, N.J.S.A. 10:5-1, et seq., the rules and regulations promulgated pursuant thereto, the State requirement for bidders to supply statements of ownership (N.J.S.A. 52:25-24.2) and the State requirement for submission of the names and addresses of certain subcontractors (N.J.S.A. 40A:11-16).

The Contract Documents may be reviewed online at no cost at www.bidset.com/mott or the

Office of Owner, the East Windsor Municipal Utilities Authority, 7 Wiltshire Drive, East Windsor, New Jersey 08520 between the hours of 9:00 AM and 4:00PM.

The Contract Documents may be obtained by any prospective bidder upon payment of the fee of sixty five dollars ($65.00) for each set of full-sized drawings with specifications by calling 1-877-424-3738 or by online request. Shipping charges are additional and variable depending upon the pick-up or delivery option selected by the purchaser. Bid documents cannot be obtained at the Office of the Owner or at Mott MacDonald's office. The printing cost is not refundable.

Pursuant to N.J.S.A. 10:5-31 et seq., bidders are required to comply with the requirements of P.L. 1975 c. 127, NJAC 17:27.

Each Bidder must submit with his bid an "Ownership Disclosure Statement" and "Non-Collusion Affidavit" on the forms included in the Contract Documents.

Bidders and their subcontractors of any tier must comply with all applicable provisions of the Public Works Contractor Registration Act, P.L. 1999, c. 238 (N.J.S.A. 34:11-56.48) and the New Jersey Prevailing Wage Act (N.J.S.A. 34:11-56.25).

Pursuant to P.L. 2004, c.57 (N.J.S.A. 52:32-44) effective September 1, 2004, all business organizations that conduct business with a New Jersey government agency are required to be registered with the State of New Jersey. Bidders and their subcontractors must submit proof that at the time of the Bid they are registered with the New Jersey Department of Treasury, Division of Revenue by submitting a copy of their Business Registration Certificate prior to Contract award.

The Contract is expected to be funded in part with the funds from the New Jersey Department of Environmental Protection and the New Jersey Environmental Infrastructure Trust. Neither the United States nor the State of New Jersey, the New Jersey Environmental Infrastructure Trust, nor any of their departments, agencies, or employees is, or will be, a party to the Contract or any lower tier contract or subcontract. The Contract or Subcontract will be subject to regulations contained in N.J.A.C. 7:22-3.1 et seq., 4.1 et seq., 5.1 et seq., 9.1 et seq. and 10 et seq., Local Public Contract, Department of Labor Current Wage Rate Determination, Prevailing Wage Act, Contract Work Hours and Safety Standard Act, Copland Act, Davis Bacon Act, Buy American Clause, Debarment and Suspension, and Socially and Economically Disadvantaged (SED) (N.A.J.C. 7:22-9).

All bids shall include a commitment to the use of small, minority, women's and labor surplus area businesses and shall be in conformity with N.J.A.C. 7:22-3.17(a)(24) with a goal of not less than 10% participation of small business enterprises owned and controlled by socially and economically disadvantaged individuals (SED's). Further details regarding required SED participation are included in the Information for Bidders and the Supplemental General Conditions.

It is the purpose of this Notice to Bidders to summarize some of the more important provisions of the Contract Documents. Prospective bidders are cautioned not to rely solely on this summary, but to read the Contract Documents in their entirety.

By Order of East Windsor
Municipal Utilities Authority

EAST WINDSOR MUNICIPAL UTILITIES AUTHORITY
MERCER COUNTY, NEW JERSEY
WATER MAIN REPLACEMENT
HUNTINGTON DRIVE

CONTRACT 2017-01

Table of Contents

Description	Page No.
Notice to Bidders	NB-1 - NB-4
Table of Contents	i - iii
Information for Bidders - Table of Contents	IB-i - IB-iii
Information for Bidders	IB-1 - IB-46
Contract Modification Forms	CMPA-1 - CMPA-4
Labor Standards	LS-1 - LS-20
Equal Employment Opportunity	FEEO-1 - FEEO-10
Supplemental General Conditions	SGC-1 - SGC-42
State Wage Rates	SWR-1 - SWR-125
Federal Wage Rates	FWR-1 - FWR-10
Scope of Contract	SC-1 - SC-2
Bid - Table of Contents	B-i
Bid	B-1 - B-43
Special Conditions	SCON-1 - SCON-8
Contract - Table of Contents	CON-i - CON-iii
Contract	CON-1 - CON-33

Table of Contents
(Continued)

Description	Page No.
Performance Labor and Material Payment Bond	PB-1 - PB-2
Surety Disclosure Statement and Certification	PB-3 - PB-5
Maintenance Bond	MB-1 - MB-2
Environmental Maintenance Bond	EMB-1 - EMB-3
Notice of Award	NA-1
Notice to Proceed	NP-1

Detailed Specifications

Division 1 - General Requirements

1000	General Requirements	01000-1 – 01000-2
1010	Additional Information	01010-1 – 01010-2
1020	Special Project Procedures	01020-1 – 01020-4
1030	Coordination	01030-1 – 01030-2
1040	Field Engineering	01040-1 – 01040-2
1050	Regulations	01050-1 – 01050-3
1060	Alternates	01060-1
1070	Measurement and Payment	01070-1 – 1070-20
1080	Project Meetings	01080-1 – 1080-2
1090	Submittals	01090-1 – 01090-4
1100	Quality Control	01100-1 – 01100-3
1110	Construction Facilities and Temporary Utilities	01110-1 – 01110-2
1120	Material and Equipment	01120-1 – 01120-4
1130	Special Conditions	01130-1 – 01130-3
1576	Policing and Traffic Control	01576-1

Division 2 - Site Work

02010	Subsurface Exploration	02010-1 – 02010-2
02105	Environmental Protection	02105-1 – 02105-5
02140	Dewatering	02140-1 – 02140-2

Table of Contents
(Continued)

Description		Page No.
02200	Earthwork	02200-1 – 02200-12
02500	Paving and Sidewalk Restoration	02500-1 – 02500-8
02900	Landscaping	02900-1 – 02900-5
Division 15 – Mechanical		
15000	Piping- General Provisions	15000-1 – 15000-5
15010	Pipe Couplings	15010-1 – 15010-2
15020	Chlorinating Pipelines	15020-1 – 15020-3
15030	Pressure and Leakage Tests	15030-1 – 15030-2
15106	Ductile Iron Pipe and Fittings	15106-1 – 15106-4
15123	HDPE Pipe and Fittings	15122-1 – 15122-8
15131	Piping Specialties	15131-1 – 15131-2
15155	Gate Valves	15155-1 – 15155-2
Appendix		
Appendix A	American Iron & Steel Requirements	Page 1 – Page 20

INFORMATION FOR BIDDERS

Table of Contents

		Page
0.00	Definitions	IB-1
0.01	Location of Work	IB-1
0.02	Contract Drawings	IB-1
0.03	Phases Comprising the Project	IB-1
0.04	Date and Place of Opening Bids	IB-1
0.05	Preparation of Bid	IB-1
0.06	Right to Accept or Reject Bids	IB-2
0.07	Withdrawal of Bids	IB-2
0.08	Items of Work	IB-3
0.09	Addenda and Interpretations	IB-3
0.10	Bid Security	IB-3
0.11	Certificate of Surety	IB-4
0.12	Obligation of Bidders	IB-4
0.13	Examination of and Familiarity with Work	IB-5
0.14	Bidder Submissions	IB-5
0.15	Rescission of Award	IB-8
0.16	Failure of Bidders to Enter Contract	IB-8
0.17	Security for Faithful Performance and Maintenance (Bonds)	IB-9
0.18	Interference or Delay	IB-9
0.19	Lines and Grades	IB-10
0.20	Insurance Requirements	IB-10
0.21	Time Limit	IB-11
0.22	Damages	IB-11
0.23	Site Conditions	IB-12
0.24	Cost Breakdown Construction Schedule and Shop Drawing Submission Schedule	IB-12

Table of Contents
(Continued)

0.25	Field Measurements	IB-14
0.26	Preconstruction and Progress Photographs	IB-14
0.27	Subsurface Structures and Utilities	IB-15
0.28	Material and Equipment	IB-16
0.29	Construction Terms and Conditions	IB-17
0.30	Nondiscrimination Provisions	IB-18
0.31	State Mandatory Affirmative Action Language, Construction Contracts	IB-18
0.32	Solid Waste Disposal	IB-21
0.33	New Jersey State Sales and Use Tax Exemption	IB-21
0.34	Allowances	IB-21
0.35	Department of Labor, Safety and Health Regulations	IB-24
0.36	Prompt Payment	IB-25
0.37	Construction Plans and Specifications	IB-25
0.38	Bidders Referred to Laws and Safety	IB-25
0.39	Subcontractor Requirements	IB-26
0.40	Pre-Construction and Construction Conferences	IB-26
0.41	Federal Labor Standards and Federal Wage Rates	IB-26
0.42	State Wage Rates and Contractor Registration	IB-27
0.43	Change Orders	IB-28
0.44	Project Observation	IB-28
0.45	Observer's Service for Saturdays, Sundays, Holidays and Off-Hours	IB-28
0.46	American Goods and Products	IB-29
0.47	Eligible Socially and Economically Disadvantaged (SED) Firms	IB-29
0.48	Access to the Work and Records	IB-29

0.49 Joint Venture Bidder Responsibility IB-29

Table of Contents
(Continued)

0.50	Quality of Materials and Workmanship	IB-30
0.51	Dewatering Facilities	IB-30
0.52	Connection to Existing Mains and Valve Operation	IB-30
0.53	Interruption in Traffic Flow and Traffic Control	IB-30
0.54	Right-to-Know Labeling	IB-30
0.55	Extra Material on Hand	IB-31
0.56	Reference to General Requirements and Special Conditions	IB-31
0.57	NJDEP and Wastewater Treatment Trust Right to Stop Work	IB-31
0.58	Debarment	IB-31
0.59	Americans with Disabilities Act (Equal Opportunity for Individuals with Disabilities)	IB-32
0.60	Security Measures of Owner	IB-32
0.61	Business Registration Certificate for Bidder and Subcontractors	IB-32
0.62	Value Engineering Construction Change Orders	IB-33

INFORMATION FOR BIDDERS

0.00 Definitions

The attention of all bidders is directed to the Article of the Contract entitled, "Definitions", for definitions of the terms, Owner, Contractor, Engineer, Contract Documents, Contract, Contract Price, Specifications, Substantial Completion, Contract Drawings and General Conditions.

In the Contract Documents the words "Bid", "bid","Proposal" and "proposal" are used interchangeably.

0.01 Location of Work

The site of the work to be performed under the Contract is located along Huntington Drive and adjacent streets within East Windsor Township.

0.02 Contract Drawings

The Contract Drawings, forming an integral part of this project, bear the following general title:

EAST WINDSOR MUNICIPAL UTILITIES AUTHORITY
MERCER COUNTY, NEW JERSEY
WATER MAIN REPLACEMENT
HUNTINGTON DRIVE
CONTRACT NO. 2018-01

Copies of the Contract Documents shall be furnished to interested parties as set forth in the Notice to Bidders.

0.03 Phases Comprising the Project

The work on this project will be performed under a single overall Contract comprising site work, and general construction work.

0.04 Date and Place of Opening Bids

Sealed Proposals for this work, as required by the Contract Documents and as specified herein, including the furnishing of all required plant, labor, equipment, materials, facilities and services, will be received at the time and place stated in the Notice to Bidders and at that time unsealed and the contents publicly announced.

0.05 Preparation of Bid

Bids must be submitted on the prescribed forms. All blank spaces for bid prices must be filled in, in ink, in both words and figures. In the event of a discrepancy between the unit price bid in words and in figures, the unit price in words is to govern. In the event of a discrepancy between the unit price bid for any pay item and the extension shown for that item under the column of the proposal form designated "Amount", the unit price is to govern. Where a unit price is bid for a pay item but no extension is provided, the Engineer will provide the extension based on the unit price bid and the estimated quantity for that pay item. Where an extension is provided by the bidder in the "Amount" column, but no unit price appears in the "Unit Price" column of the proposal form, the Engineer will provide the unit price by dividing the "Amount" figure provided by the Bidder by the estimated quantity. When no figure is provided by the Bidder in both the "Unit Price" and "Amount" columns for one or more pay items, or where no figure is provided in the "Amount" column for one or more lump sum pay items, the Owner shall reject the Bid. Bidders shall not remove and submit the Bid pages separate from the volume of Contract Documents but shall submit their Bids bound in with the complete volume of Contract Documents, including all pages correctly assembled. The Contract Drawings do not have to be included.

The Bid shall contain the full name and address of every person, partnership and corporation having an interest in the bid. In addition, any trade name of the bidder must be set forth in full. When an individual proprietor bids, the bid must be signed for or on behalf of the proprietor. When a partnership bids, the bid must be signed for or on behalf of each general partner. When a corporation bids the president and secretary (or assistant secretary) must sign, except that other officers of the corporation may sign, provided a corporate resolution, certified by the corporate secretary (or assistant secretary) duly authorizing such other officers to sign, accompanies the bid. Bids of corporations shall have the corporate seal affixed. When a limited liability company bids, the bid must be signed by a managing member of that LLC. Bids signed by an agent must be accompanied by a Power of Attorney duly acknowledged before a notary public, evidencing the authority of the agent to act for the principal or principals. All corporations and partnerships must complete the statement form which appears on the Bid pages pursuant to the requirements of P.L. 1977, c. 33 (N.J.S.A. 52:25-24.2).

The envelopes containing the bids must be sealed, addressed as outlined in the Notice to Bidders and prominently marked "Bid Contract No. 2018-01, Water Main Replacement – Huntington Drive."

0.06 Right to Accept or Reject Bids

The Owner will evaluate bids and any award will be made to the lowest responsible bidder whose bid conforms to this solicitation in accordance with N.J.S.A. 40A:11-16(c). The Owner reserves the right to reject any or all bids and to waive minor informalities or irregularities in bids received. If required in the Contract Documents, the terms regarding qualifications of bidders will be as per N.J.S.A. 40A:11-25 through -32.

The Owner may reject bids which are incomplete, conditional, or obscure, or which contain additions not called for, erasures not properly initialed, alterations, or irregularities of any kind. Alterations by erasure or interlineation must be explained or noted in the bid over the signature of the Bidder.

In the event that there is a discrepancy between prices written in words and written in figures, prices written in words shall govern. **No bid will be accepted which does not contain a price for every bid item contained in the Bid forms.**

No contract for work shall be awarded to a contractor or subcontractor who is included on the New Jersey State Treasurer's list of debarred, suspended or disqualified bidders. Submission of false, deceptive, or fraudulent statements or information by bidders shall result in bid rejection or, if applicable, revocation of an awarded contract. Additionally, any such bidder will be subject to the criminal and/or civil penalties provided by all applicable state and federal laws.

In accordance with N.J.S.A 40A:11-34, any person who makes or causes to be made, a false, deceptive or fraudulent statement in the statement or answers in response to the questionnaire, or in the course of any hearing hereunder, shall be guilty of a misdemeanor, and upon conviction shall be punishable by a fine of not less than $100.00 nor more than $1,000.00, and shall be permanently disqualified from bidding on all public work or contracts of the contracting unit which submitted the questionnaire; or, in the case of an individual or an officer or employee charged with the duty of responding to the questionnaire for a person, firm, co-partnership, association or corporation, by such fine or by imprisonment, not exceeding 6 months, or both.

In accordance with N.J.S.A 40A:11-33, any deposit made by any person who makes or causes to be made a false, deceptive or fraudulent statement or answers in response to a questionnaire or in the course of a hearing may be caused to be forfeited, as liquidated damages by and to the contracting unit.

0.07 Withdrawal of Bids

N.J.S.A. 40A:11-23.3 authorizes a bidder to request withdrawal of a public works bid due to a mistake on the part of the bidder. A mistake is defined by N.J.S.A. 40A:11-2(42) as a clerical error that is an unintentional and substantial computational error or an unintentional omission of a substantial quantity of labor, material, or both, from the final bid computation.

A bidder claiming a mistake under N.J.S.A. 40A:11-23.3 must submit a request for withdrawal, in writing, by certified or registered mail to the Owner. The bidder must request withdrawal of a bid due to a mistake, as defined by the law, within five business days after the receipt and opening of the bids. Since the bid withdrawal request shall be effective as of the postmark of the certified or registered mailing, Owner may contact all

bidders, after bids are opened, to ascertain if any bidders wish to, or already have exercised a request to withdraw their bid pursuant to N.J.S.A. 40A:11-23.3.

A bidder's request to withdraw the bid shall contain evidence, including any pertinent documents, demonstrating that a mistake was made. Such documents and relevant written information shall be reviewed and evaluated by the owner's designated staff pursuant to the statutory criteria of N.J.S.A. 40A:11-23.3.

The owner will not consider any written request for a bid withdrawal for a mistake, as defined by N.J.S.A. 40A:11-2(42), by a bidder in the preparation of a bid proposal unless the postmark of the certified or registered mailing is within the five business days following the opening of bids.

If a bidder withdraws a bid, the bidder shall be disqualified from future bidding on the same project, including whenever all bids are rejected pursuant to section 21 of P.L. 1999, c.440 (C.40A:11-13.2)

0.08 Items of Work

The Bidder understands that the Owner may, without limitation, increase, decrease or eliminate items of work to be performed under the Contract. The Bidder further understands that in case of any error or inconsistency in the figures, the unit prices stated in the proposal shall govern.

The prime Contractor (the bidder) shall perform on the site and with its own organization, work equivalent to at least 51% (by cost) of the total amount of work to be performed under this Contract. This percentage may be reduced by a supplemental agreement to this Contract if during the performance of the work the Contractor requests a reduction and the Owner determines that the reduction would be to the advantage of the Owner.

0.09 Addenda and Interpretations

No interpretations of the meaning of the Contract Drawings, Specifications or other Contract Documents will be made to any bidder orally. Any request for interpretations shall be made in writing, addressed to Mott MacDonald, 111 Wood Avenue South, Iselin, New Jersey 08830-4112, and, to be given consideration, must be received at least twelve (12) days - Saturdays, Sundays and holidays excepted - prior to the date fixed for the opening of bids. Any and all revisions, interpretations, or supplemental instructions will be in the form of written addenda to the Contract Documents which, if issued, will be sent by certified mail, return receipt requested, or by certified facsimile transmission (meaning that sender's facsimile machine produces a receipt showing the date and time of transmission and that the transmission was successful), or by a delivery service that provides certification of delivery to the sender, to each of the persons who has received a bid package, at the respective addresses furnished for such purpose, not later than seven (7) days - Saturdays, Sundays and holidays excepted - prior to the date fixed for the

opening of bids. Failure of any bidder to receive any such addenda shall not relieve the bidder from any obligation under such addenda. All addenda so issued shall become part of the Contract Documents. If any addenda materially change the solicitation, the Owner may postpone the date for the opening of bids.

0.10 Bid Security

Each bid must be accompanied by a certified check, cashiers check or bid bond prepared on the form in the Contract Documents, or on an equivalent form which has been approved by Owner's attorney; duly executed by the Bidder as principal and having as surety thereon a surety company duly authorized to issue bonds in New Jersey, in the amount of 10% of the total amount bid, but not in excess of $20,000.

Such checks or bid bonds except those of the three apparent lowest responsible bidders, shall, unless otherwise requested by the bidder, be returned within ten (10) days after the opening of the bids, Sundays and holidays excepted, and the bids of such bidders shall be considered as withdrawn. Within three days, Sundays and holidays excepted, after the awarding and signing of the Contract and the approval of the Contractor's performance bond, insurance and other submissions required in the Information for Bidders, the bid security of the remaining unsuccessful bidders shall be returned to them. The check or bid bond of the bidder to whom the Contract is awarded shall be retained until the required performance bond, insurance and other submissions required in the Information for Bidders is submitted and approved and the Contract is signed. If, for any reason, the Owner does not make an award within sixty (60) days after the opening of bids, the Owner may request that each of the three apparent lowest responsible bidders agree to hold their bids open for consideration for a longer period.

Bid security shall remain in effect for a minimum of sixty (60) calendar days from the date of opening of bids, except as set forth above. In the event that a bidder shall agree to an extension of the sixty (60) day period for making award, such bidder shall be required to ensure that their bid security shall remain in effect to cover the period of extension.

An attorney-in-fact who signs any bid bonds or other bonds required by the Contract Documents shall file with each bond a certified copy of a Power of Attorney duly acknowledged before a notary public authorizing the attorney-in-fact to execute said bonds in behalf of the surety.

0.11 Certificate of Surety

Each bidder must accompany his bid with an appropriate certificate from a surety company duly authorized to issue bonds in New Jersey and satisfactory to the Owner, stating that such surety company will provide the bidder with the bonds in such sums as are required by the Contract Documents for the faithful performance of the Contract including the payment of the labor and material furnished in the prosecution thereof and the faithful performance of the contract provisions relating to Contract warranties and the

repair and maintenance of the Contract Work and keeping the same in good and serviceable condition. All surety bonds in connection with the advertisement and award of this Contract must be written by a surety company whose qualification and authority to issue bonds in New Jersey has been certified by the New Jersey Commissioner of Insurance pursuant to the provisions of N.J.S.A. 17:17-1 et seq. The Certificate of Surety must have attached to it a valid power of attorney, issued by the surety, stating that the person who signed the Certificate on behalf of the surety is authorized to commit the surety to the issuance of bonds in an amount at least equal to the total bid.

Since federal funding is involved in the Project, the surety company must also hold a federal Certificate of Authority as an acceptable surety (31CFR Part 223) and must be listed on the Federal Treasury List (Department Circular 570 - "Companies Holding Certificates of Authority as Acceptable Sureties on Federal Bonds and as Acceptable Reinsuring Companies". Copies of this document may be obtained from the USEPA.

With respect to all payment and performance bonds in the amount of $850,000 or more, the surety must hold a current Certificate of Authority issued by the United States Secretary of the Treasury pursuant to 31 U.S.C. Sec. 9305, that is valid in New Jersey as listed annually in the United States Treasury Circular 570, all as required by and subject to the exceptions and exemptions of N.J.S.A. 2A:44-143.

With respect to payment and performance bonds in the amount of more than $3.5 million, there are further certification requirements under N.J.S.A. 2A:44-143 which must be observed.

N.J.S.A. 2A:44-143 requires that a Surety Disclosure Statement and Certification be attached to the payment and performance bonds. The requisite form of such Certification is set forth in the Bid pages herein. The Owner may not accept a payment bond or a performance bond unless the required Surety Disclosure Statement and Certification, complete in all respects and duly acknowledged according to Law, is attached thereto.

0.12 Obligation of Bidders

At the time of the opening of bids, each bidder will be conclusively presumed to have read and to be thoroughly familiar with the Contract Documents, including all addenda and interpretations issued. The failure or omission of any bidder to receive or examine the Contract Documents and any addenda thereto or interpretations thereof shall in no way relieve the bidder from any obligation in respect of his bid. Failure of the bidder to acknowledge the bidder's receipt of any notice or revisions or addenda to the advertisement or bid documents, in the document set forth in the Bid pages of the Contract Documents, entitled "Acknowledgement of Receipt of Changes to Bid Document Form" shall be deemed a fatal defect that shall render the bid proposal unresponsive and that cannot be cured by the Owner.

0.13 Examination of and Familiarity with Work

Each bidder must inform himself fully of the conditions under which the work will be performed. Failure to do so will not relieve a successful bidder of the obligation to furnish all plant, labor, material, equipment, facilities and services necessary to carry out the provisions of the Contract Documents, and to complete the required work for the consideration set forth in the bid.

Bidders are expected to read and become familiar with the Contract Documents, including all addenda; to visit the site of the work; to make their own estimates of the plant, labor, material, equipment, facilities and services needed to perform the work; to make any required tests and inspections and to evaluate the difficulties attending the execution of the proposed Contract, including local conditions, site conditions, location and availability of utilities, labor, transportation facilities, uncertainties of weather, subsurface conditions and other contingencies. In no case will the Owner or the Engineer assume any responsibility whatsoever for any interpretation, deduction or conclusion to be drawn from the Contractor's examination of the site. Failure to become aware of all conditions affecting the work will not relieve the successful bidder from assuming all responsibility for estimating the difficulties and cost of successfully performing the complete work. The failure or omission of any bidder to receive or examine any form, instrument or document; or to make any required tests or inspections shall in no case relieve any bidder from any obligation under the Contract Documents.

Neither the Owner nor the Engineer make any express or implied representations or warranties as to the accuracy of the information shown on drawings of previous construction or any interpretation of same. The Contractor shall ascertain by his own field inspections the accuracy of the information shown on any existing drawings or reports.

0.14 Bidder Submissions

PART I
Items Mandatory for Bid

The bidder must submit the following Mandatory Items with the Bid. In order to be considered an adequate submission, each item must meet the requirements of the relevant statute and, in the case of the execution of the Contract Documents, must be legally binding on the bidder.

The following items shall be mandatory for submission with the Bid:

A. A guarantee to accompany the bid that complies with N.J.S.A. 40A:11-21.

B. A certificate from a surety company that complies with N.J.S.A.40A:11-22.

C. A statement of corporate ownership that complies with N.J.S.A. 52:25-24.2.

D. A listing of subcontractors that complies with N.J.S.A. 40a:11-16.

E. A document provided by the Owner for the bidder to acknowledge the bidder's receipt of any notices, revisions or addenda to the advertisement or bid documents pursuant to N.J.S.A. 40A:11-23.1.

F. Bid is legally executed on behalf of the bidder.

G. Certification of Nonsegregated Facilities.

H. Prices for every bid item contained in the Bid forms.

I. A signed "Disclosure of Investment Activities in Iran" form that complies with N.J.S.A. 40A:11-2.1

PART II
Items Discretionary for Bid but Mandatory for Award

The Bidder is requested to submit the following items with the Bid. The failure of the bidder to provide any of these items in proper form by the time set for award may result in the rejection of the Bid.

The following items shall be mandatory for award:

A. Prices in words and numbers as may be modified to correct discrepancies (or omissions) inserted for each Bid Item in Bid.

B. Total Price bid as may be modified to correct discrepancies in the individual bid amounts inserted in Bid in words and numbers.

C. Details of bid security inserted in Bid Pages.

D. Signature of Bidder on Bid is witnessed.

E. Names of signers and witnesses are typed or printed below signatures.

F. Corporate acknowledgment on Certificate of Surety and evidence of authority of the signer is attached to Certificate of Surety (N.J.S.A. 40A:11-22 and N.J.S.A. 40A:11-16.3b).

G. Certification of Bidder's Status on State Treasurer's List has been completed and submitted.

H. Equipment Certification is completed (N.J.S.A. 40A:11-20).

I. Duly acknowledged Powers of Attorney are attached to Bid Pages for Bids and signed by Attorney-in-Fact.

J. For corporate bidders, corporate resolution authorizing the Bid is attached to Bid Pages.

K. For joint venture bidders, separate Ownership Disclosure Statements are included in the Bid Pages for each member (N.J.S.A. 52:25-24.2).

L. A tabulation of other work now under contract, giving location, type, size, total cost, required date of completion and the percentage of completion (to the date of this bid) of each job.

M. Evidence of bidder's compliance with all legal requirements for the bidder to bid and to enter into the contract (e.g., plumbing contractor compliance with N.J.S.A. 45:15C12.3 (b), electrical compliance with N.J.S.A. 45:5A-9, etc.).

N. Evidence, in the case of a partnership, as to whether the partnership is general or limited and identifying the names and addresses of all partners and indicating whether they are general or limited partners.

O. Evidence, in the case of a joint venture bidder, as to the parties to the joint venture, a statement of the individual responsibilities of each party to the joint venture agreement and such other information as may be pertinent to each of the joint venturers' responsibility to fulfill the obligations of the Contract. All information and certification required in the Contract Documents shall be separately stated for each member of the joint venture.

P. A statement of the largest amount of construction work which the bidder has done in any one year (state the year). Describe experience with similar projects over the last five (5) years. State and describe the projects of equal or greater value during the last five (5) years.

Q. Certificate(s) of Registration under The Public Works Contractor Registration Act (where applicable) (N.J.S.A. 34:11-56.48 - et. seq.) for bidder and subcontractors of any tier.

R. A Non-Collusion Affidavit is correctly filled out, signed on behalf of Bidder and properly notarized (N.J.S.A. 52:34-15).

S. Contractor's Certification regarding Discrimination, Affirmative Action and Equal Employment Opportunity completed.

T. Business Registration Certificate(s) to comply with the provisions of N.J.S.A. 52:32-44 for bidder and subcontractors of any tier. The Business Registration Certificates shall be provided to the Contracting Agency and that of any named subcontractor prior to the time the contract is awarded, although the Business

Registration Certificates must be in the possession of the bidder at the time of the bid proposal.

U. A signed "Certification for American Iron and Steel Requirements of P.L. 113-76, Consolidated Appropriations Act, 2014" form.

V. At least one bank reference.

W. At least two credit references.

X. Such additional information as may be required to establish that the bidder is responsible and is adequately prepared to fulfill the requirements of the Contract.

The Owner and the Engineer may in addition make such investigations as they deem necessary to verify the responsibility of the bidder to perform the Contract, and the bidder shall furnish the Owner with all additional information and data for this purpose as may be requested. The Owner reserves the right to reject any bid if the evidence submitted by the bidder, or the investigation of such bidder fails to satisfy the Owner that such bidder has the responsibility to properly carry out the obligations of the Contract.

Before taking final action to reject a low bid for lack of bidder responsibility, the Owner shall notify the low bidder and afford such bidder an opportunity to request a hearing before the Owner to present any additional information concerning the low bidder's responsibility.

0.15 Rescission of Award

It is expressly understood and agreed by the bidder that, in addition to and not in lieu of any other provisions of the Contract Documents, the Owner shall condition any award made by it upon consummation of financing and/or upon receipt of the necessary approvals of the State and Federal agencies involved and, further, may, at any time, rescind any award made by it, if financing satisfactory to the Owner cannot be consummated as contemplated, if such financing does not continue to be available on terms satisfactory to the Owner, if the requisite State and Federal agencies do not approve said Contract, or if any court of competent jurisdiction shall enjoin or otherwise prohibit the Owner from proceeding with the work.

0.16 Failure of Bidders to Enter Contract

On a date and time to be set by the Owner and notified to the successful bidder, but in any case within twenty-one (21) days, Sundays and holidays excepted, after notification of the award of the Contract, the successful bidder shall deliver to the Owner, in quadruplicate, the duly executed Contracts. The successful bidder shall simultaneously deliver to the Owner an executed Performance Bond of a responsible surety company authorized to issue bonds in New Jersey and satisfactory to the Owner, as specified herein, and evidence of all certificates of insurance required in the Contract Documents.

The Contractor shall also submit at that time a detailed Cost Breakdown as further described in the Article of the Information for Bidders, entitled, "Cost Breakdown, Construction Schedule and Shop Drawing Schedule." This Cost Breakdown must be satisfactory to the Owner prior to the Owner's signing the Contract and may or may not, in the discretion of the Engineer, be used by the Engineer as a basis for evaluating periodic Applications for payment.

The Contractor shall also submit at that time a detailed Construction Schedule Bar Graph, CPM and detailed Shop Drawing Submission Schedule, which are further described in the Article of the Information for Bidders, entitled, "Cost Breakdown, Construction Schedule Bar Graph and Shop Drawing Submission Schedule" and which must be satisfactory to the Owner prior to the Owner's signing the Contract. The submission of the foregoing documents in a form satisfactory to the Owner shall be a condition precedent to the Owner's execution of the Contract. Copies of the referenced documents shall be provided to the Engineer at the same time.

Should the successful bidder fail or refuse to execute and deliver the Contract, bonds, certificate of insurance, Cost Breakdown, Construction Schedule Bar Graph, CPM, Shop Drawing Submission Schedule, or any of them, satisfactory to the Owner, within twenty-one (21) days after the Contractor has received notice of the award, Sundays and holidays excepted, or within such further time period as the Contractor and Owner may in writing agree, the Owner shall have the right to rescind the award and declare the amount of the Contractor's bid security to be forfeited to the Owner, as liquidated damages for such failure or refusal.

0.17 Security for Faithful Performance Payment and Maintenance (Bonds)

The execution of the Contract is contingent *inter alia* upon the Contractor's furnishing of the Performance Labor and Material Payment Bond as set forth herein.

The Performance Labor and Material Payment Bond shall be in a sum equal to 100% of the accepted bid as security for the faithful performance of the Contract and for the payment of all persons performing labor or furnishing materials in connection with the Contract in accordance with N.J.S.A 40A:11-22. The Performance Labor and Material Payment Bond shall remain in effect until completion and acceptance by the Owner as specified in the Article of the Contract, entitled "Final Estimate and Payment"; and the furnishing of the Maintenance Bond to cover the Contractor's obligations specified in the Article of the Contract, entitled "Maintenance Period".

The Maintenance Bond shall be in a sum equal to 100% of the Contract Price, less the amount of the Environmental Maintenance Bond, as security for the faithful performance of the Contract during the Maintenance Period, as specified in the Articles of the Contract, entitled "Warranty" and "Maintenance Period". The Maintenance Bond shall be furnished to the Owner prior to completion and acceptance by the Owner as specified in

the Article of the Contract, entitled "Final Estimate and Payment" and shall remain in effect for a period of one (1) year from such completion and acceptance.

At the time of completion and acceptance by the Owner as specified in the Articles of the Contract, entitled "Warranty" and "Maintenance Period" and prior to the time of final payment under the Contract, the Contractor shall furnish an Environmental Maintenance Bond. The Environmental Maintenance Bond shall be supplied in the amount of $25,000 or 50% of the bid price for the Environmental Protection bid items, whichever is greater, and shall remain in full force and effect for one (1) year beyond the end of the Maintenance Period specified in the Article of the Contract, entitled "Maintenance Period".

The Performance Bond and Maintenance Bond shall be in the forms included in the Contract Documents, or in equivalent forms which have received the prior approval of the Owner's Attorney.

An attorney-in-fact who signs any bonds must file with each bond a certified copy of his power of attorney authorizing him to execute said bonds on behalf of the surety.

0.18 Interference or Delay

Insofar as possible, the Contractor in carrying out his work, must employ such methods or means as will not cause any interruption of or interference with the work of any other contractor or subcontractor on this Contract or on any other on-going project contracted for by the Owner, or operations conducted by the Owner, whether or not they are directly associated with this Contract. All contractors will be required to cooperate to the end that the projects will be brought to a successful conclusion as rapidly as possible, but the Owner cannot guarantee that no interference or delay will be caused thereby. In the event that the delay is caused by the Owner's negligence, bad faith, active interference, or tortious conduct, then the Contractor may make a claim for its damages caused by said delay. The Owner will review and evaluate the merits of each claim submitted. The Owner will endeavor to work cooperatively with the Contractor to resolve these issues in a timely manner. The Contractor shall refer to the requirements of the Article of this Information for Bidders, entitled, "Cost Breakdown, Construction Schedule and Shop Drawing Submission Schedule."

0.19 Lines and Grades

Attention of bidders is directed to the following specific requirements regarding the establishing and transferring of lines and grades.

a) The Engineer will establish a bench mark(s) and baselines as shown on the Contract Drawings. The Contractor shall run all offset lines, set the drive stakes, set batter boards, and take all other measurements in order to lay out the work in

accordance with the Contract Documents. The Contractor shall be aware that the alignment may change slightly due to the existing utilities.

b) No separate payment will be made to the Contractor for the cost of establishing lines and grades or for the cost of assisting the Engineer in checking of such work or for delay in checking such work, but the cost thereof shall be included in prices bid for the various items.

Bidders shall also note further requirements as explained in the paragraph entitled, "Line, Grades and Measurements" as set forth in the Division 1 – General Requirements Section 1100 of the Specifications.

0.20 Insurance Requirements

The Contractor shall not commence any work under the Contract until the Contractor has obtained, at the Contractor's own expense, all insurance as set forth in the Contract Article entitled, "Insurance" and has delivered all Certificates of Insurance as required by the Article VII, Insurance, set forth in the Contract. The Contractor shall not permit any subcontractor of any tier to begin work until the required insurance and certificates of insurance have been provided to the Owner and Engineer by the subcontractor. Such insurance and certificates of insurance must be in a form satisfactory to the Owner.

The East Windsor Municipal Authority, Mercer County, Mott MacDonald, the State of New Jersey and its agencies, employees and officers shall be named as additional insureds on all Certificates of Insurance submitted by the Contractor, except Workers' Compensation Insurance.

0.21 Time Limit

The Contractor is required to begin work within ten (10) calendar days of Contractor's receipt of a written Notice to Proceed issued by the Owner. The Contractor shall prosecute the work diligently and uninterruptedly, at a rate to ensure completion sufficient for final acceptance of all work within 150 consecutive calendar days from the day of the Contractor's receipt of the written Notice to Proceed. The Contractor shall comply with all provisions in the Contract Documents regarding intermediate times of completion of construction.

The Contractor shall complete certain minimum amounts of work under this Contract by specified times as shown in the following Schedule of Intermediate Completion Times.

Intermediate Completion Time, In Consecutive Calendar Days After Contractor's Receipt of Written Notice to Proceed	Minimum Percentage Dollar Value of Work to be Completed Under the Contract (Percentage of Completion)

30	10%
90	60%
150	100%

Time is of the essence for final completion of all work within the time period starting from the Contractor's receipt of the Notice to Proceed and for the intermediate completion of the work by the above Intermediate Completion Times.

0.22 Damages

The bidder shall refer to the Article of the Contract entitled, "Damages and Liquidated Damages".

0.23 Site Conditions

Bidders are required to make any investigations of site conditions bidder shall deem necessary. However, prior to any site investigation, the bidder shall obtain the permission of the Owner and the bidder shall ascertain the location of underground utilities and structures. The bidder shall be responsible for any damage caused by the bidder, shall restore the site to its original condition and shall repair any damage resulting from such investigations. In addition, prior to undertaking any on-site investigations, the Bidder shall furnish the Owner with a certificate of insurance which is in accordance with the Contract Article, entitled "Insurance".

0.24 Cost Breakdown, Construction Schedule and Shop Drawing Submission Schedule

On a date and time set by the Owner and notified to the successful bidder, but in any case within twenty-one (21) days, Sundays and holidays excepted, after notification of the award of the Contract, the successful bidder shall deliver to the Owner and the Engineer (in addition to the other documents referred to in the Article of the Information for Bidders entitled, "Failure of Bidders to Enter Contract"), a detailed Cost Breakdown, a detailed Construction Schedule Bar Graph, CPM and a detailed Shop Drawing Submission Schedule. The breakdown and schedules are for the review of the Owner and the Engineer who may elect to comment upon the contents as it may suit their respective interests. No Contract will be signed by the Owner until these documents are accepted by the Owner and Engineer and the Contractor hereby agrees to any extension of the time limit set forth in N.J.S.A. 40A:11-24(b) necessary for this purpose.

A cost breakdown is not required for contracts with all unit price items.

Neither the comments upon nor the acceptance of the Cost Breakdown or Construction Schedule Bar Graph or Shop Drawing Submission Schedule by the Owner or Engineer shall relieve the Contractor of his responsibility for the means, methods, techniques, sequences and procedures of construction, or for the safety precautions and programs

incident thereto; and neither the Owner nor the Engineer will be responsible for the Contractor's failure to perform the work in accordance with the Contract Documents.

The detailed Cost Breakdown will be a reference document to which the Owner and Engineer may (but need not) refer in determining the value of the work-in-place in order to approve the periodic Applications for Payment. The detailed Cost Breakdown must be sufficiently detailed to permit complete appraisal of the work to the degree that will permit all parties to be fairly treated. This breakdown may, but will not necessarily be used as a basis for determining the cost of any change orders which might occur during the period of construction.

The Cost Breakdown shall set forth, in detail, a true and representative breakdown of costs, by each major Specification Division, for each of the individual components listed in the Scope of Contract; and shall include the expected delivered costs of all materials and equipment to be installed and the costs for the plant, labor, construction equipment, facilities, services and overhead to be incurred in connection with each such component and in connection with the Contract generally. The Cost Breakdown must also include line items for testing and maintenance, where applicable. The Cost Breakdown shall, as nearly as possible, reflect the true cost of each item, and the Owner reserves the right to reject the Cost Breakdown if the Owner considers it unbalanced, unreasonable, unsatisfactory or lacking in detail. The burden of proof shall be upon the Contractor to substantiate the correctness of the proposed Cost Breakdown as fit for its intended purpose. If the Contractor fails to provide a Cost Breakdown satisfactory to the Owner, the Owner shall, in its sole discretion, have the right to have a Cost Breakdown supplied by the Engineer and, in such case, the Contractor agrees to be bound by the Cost Breakdown to be supplied by the Engineer. In preparing his bid, the Contractor shall limit mobilization costs in accordance with N.J.A.C. 7:14-2.9(b).

The Construction Schedule Bar Graph must be submitted on a date and time set by the Owner and notified to the successful bidder, but in any case within twenty-one (21) days, Sundays and holidays excepted, after notification of the award of the Contract.

The Construction Schedule Bar Graph is to be a graphical representation of all significant construction and construction-related activities indicating their duration and the concurrence with the various contract activities.

The Construction Schedule Bar Graph must be in accordance with the calendar days permitted for construction and the Intermediate Completion Times and must indicate appropriately the percentage of work scheduled for completion by any given day of the Schedule.

The detailed CPM must be submitted by the Contractor to the Owner and Engineer and accepted prior to the Contractor's first application for a monthly progress payment.

The CPM must show all interfacing with shop drawing submittals contained on the Shop Drawing Submission Schedule. It must cover the acquisition of materials, plant, equipment and facilities. It must contain sufficient detail to show the proper relationships between construction activities on any new construction element and all the other elements; between new elements and site work, and between new elements, site work and demolition work. The CPM shall be constructed so that at no time will the existing facilities be unable to provide proper and effective water treatment.

Both the Construction Schedule Bar Graph and the CPM must be in accordance with the calendar days permitted for construction and the Intermediate Completion Times and must indicate appropriately the percentage of work scheduled for completion by any given day of the Schedule.

The detailed Shop Drawing Submission Schedule must account for each item for which shop drawings are required, must indicate the equipment manufacturer proposed for use and the time frame estimated from first submittal to projected final approval of any item.

The Contractor shall enter his actual progress on the Construction Schedules and shall deliver copies to the Owner and Engineer at least once each month. If at any time, in the opinion of the Owner, progress is not being maintained as required by the Construction Schedules, amendments shall be made to the Schedules to regain the progress in the work required by the Contract Documents, without additional cost to the Owner. In this circumstance the Owner may require the Contractor to increase its level of effort and to submit for review any amendments to the Construction Schedules as the Owner deems necessary to demonstrate how the required rate of progress will be regained. The amendments shall be subject to the review of the Owner, but action or inaction by the Owner shall not relieve the Contractor of any responsibility under the Contract. Failure of the Contractor to comply with the requirements of the Owner shall be grounds for the Owner to order the Contractor to discontinue the work under the Article of the Contract entitled, "Right of the Owner to Terminate the Contract or Give a Three (3) Day Deficiency Notice".

Further, the Contractor may be required by the Owner to submit supplementary construction schedules, concurrent with applications for monthly progress payments, which will show the order in which the Contractor will start various parts of the work and the estimated dates of completion of these parts. Such submissions, acceptable to the Owner and Engineer, may be a prerequisite for consideration of applications for progress payments and shall be revised to indicate the progress of the work and the projected schedule at the time of the applications for the progress payments.

0.25 Field Measurements

The Drawings show existing conditions only in a general way, and it shall be the responsibility of the Contractor to verify all distances and locations in the field.

It is the Contractor's responsibility and obligation to have a licensed surveyor provide the accurate location of all new structures and to tie the new structures to property lines.

Contractor is responsible to utilize a Licensed Surveyor to accurately locate all piles.

0.26 Preconstruction and Progress Photographs

Photographer: Engage a qualified commercial photographer experienced in construction photography whose work is acceptable to the Owner and Engineer to take construction photographs.

Construction Photographs: Submit three (3) color prints and three (3) digital copies in **UNPROCESSED RAW FORMAT and JPEG or TIFF format with ownership or full usage rights** of each photographic view within thirty (30) days of taking photographs. Digital images are to have a minimum resolution of 3872x2592 pixels. Copies of digital images are to be provided to engineer on high quality CD or DVD (700MB CD-R or 4.7 GB DVD-R or DVD+R in labeled "jewel" case). These requirements apply for all photographs to be taken as part of this contract including, but not limited to, Preconstruction Photographs, Periodic Construction Photographs, and Final Completion Construction Photographs.

i. Format: 8-by-10-inch smooth-surface gloss prints on single-weight commercial-grade stock, enclosed back to back in clear plastic sleeves that are punched for standard 3-ring binder. Such sleeves are commonly available through stationery suppliers, Century Photo, www.centuryphoto.com, EZ2c poly photo pages Stock # CK-PP200-521PK or equal.

ii. Identification: On back of each print, provide an applied label or rubber-stamped impression with the following information:

1. Name of Project.
2. Name and address of photographer.
3. Name of Engineer.
4. Name of Contractor.
5. Date photograph was taken.
6. Description of vantage point, indicating location, direction (by compass point), and elevation or story of construction.

Photographic Media: **Digital UNPROCESSED RAW FORMAT and JPEG or TIFF format with ownership or full usage rights**, camera must be capable of recording digital images with a minimum resolution of 3872x2592 pixels (camera image sensor shall be capable of recording 10 megapixel minimum).

Print Media: Digital images shall be printed on professional quality photographic paper.

Date Stamp: Unless otherwise indicated, date and time stamp each photograph as it is being taken so stamp is integral to photograph.

A. Preconstruction Photographs: The Contractor shall furnish photographs showing the existing condition prior to the start of site and access clearing and construction. Before starting construction, take a minimum of fifteen (15) digital color photographs of Project site and surrounding properties from different vantage points. Show existing conditions of adjacent properties. At a minimum, one photograph must be obtained for each 100 feet of construction area with special attention given to environmentally critical areas and areas outside of the public right-of-way. Take additional photographs as necessary to adequately document condition of existing improvements to remain. Photographs shall be labeled by station so that upon completion of the construction, or during construction, if necessary, subsequent photographs can be taken from the same control points.

B. Periodic Construction Photographs: Take a minimum of twelve (12) digital color photographs monthly coinciding with cutoff date associated with each Application for Payment. Photographer shall select vantage points to best show status of construction and progress since last photographs were taken. Ninety (90) construction progress photographs, exclusive of duplicates, as specified above, shall be provided during the course of the project. In the event the project has more or fewer monthly Applications for Payment than 6, then the number of construction progress photographs shall be adjusted accordingly at no additional cost to the Owner.

C. Final Completion Construction Photographs: Take a minimum of ten (10) digital color photographs after date of Substantial Completion for submission as Project Record Document. Engineer and/or Owner will direct photographer for desired vantage points.

The Engineer, as his discretion, may direct the manner, method, and units of the construction to be photographed; therefore, before pictures are to be taken, the Contractor shall notify the Engineer at lease 24 hours in advance.

In the event that the Contractor delays in complying with above requirements, the Engineer, in conjunction with the Owner, may call in an experienced photographer to take such photographs, and the cost thereof shall be borne by the Contractor.

0.27 Subsurface Structures and Utilities

The Contractor will be held solely responsible for locating and protecting all underground utilities and structures affected by Contractor activities or the work; including, but not limited to, utilities and structures of the Owner, and the Contractor shall comply with all applicable provisions of the Underground Facility Protection Act (PC 1994, C. 118). The Contractor shall notify, in writing, the owners of all utilities and structures which will or

may be affected by the nature and scope of the project or the Contractor's operations. The Contractor shall, at his own expense, arrange with the owners of all such utilities and structures for the location of their utilities and structures, and shall be responsible for the protection of subsurface structures and utilities, and shall pay all charges, costs and fees in connection therewith at his own expense. Contractor shall utilize hand digging where required by law.

Attention is particularly directed to the fact that the locations, elevations and sizes of utilities and other subsurface structures shown on the Contract Drawings are not warranted to be even approximately correct, nor can they be assumed to be the only subsurface piping or structures which may be encountered in the work. All required test pit excavations are to be performed prior to the start of work to locate existing subsurface piping and structures at the expense of the Contractor.

0.28 Materials and Equipment

In order to establish standards of quality, the Engineer, in the detailed Specifications, may have referred to certain "Brand Name" products by name and/or catalog number. This procedure is not to be construed as eliminating from competition other products of equivalent or better quality by other suppliers or manufacturers where fully suitable in design and manufacture.

The Contractor's bid must be based upon the materials and equipment named in the Specifications, or materials and equipment of equivalent quality and effectiveness. The first named supplier shall be considered as the standard of reference, for the Engineers design and for the equivalency determination to be made by the Engineer.

A. Proprietary Goods and Services

Engineering may require Contractor to provide certain specified goods and services that are proprietary in nature. In such cases, the goods and services may be purchased by stipulating the proprietary goods and services in the bid specification in any case in which the resolution authorizing the contract so indicates, and the special need for such proprietary goods or services is directly related the performance, completion or undertaking of the purpose for which the contract is awarded.

B. Equivalent Materials and Equipment

Following execution of the Contract with the successful bidder, the Contractor may then submit to the Engineer for consideration the use of materials and equipment which the Contractor believes to be equivalent to or better than those specified. Requests for review of equivalent items of material and equipment will not be accepted by the Engineer from anyone other than the Contractor.

To be considered an equivalent, the materials and equipment must be shown by the Contractor to meet all requirements of the Specifications herein; be of similar type, function and quality; be cost effective, as compared to the materials and equipment named, in all respects, including first costs, operating costs and maintenance costs; and must perform satisfactorily.

C. Substitution of Materials and Equipment

The procedure to be followed for review of proposed substitutions for the materials and equipment not equivalent to those specified is as follows:

Requests for review of substitute items of material and equipment will not be accepted by the Engineer from anyone other than the Contractor. If the Contractor wishes to furnish or use a substitute item of material or equipment, the Contractor shall make a written application to the Engineer for acceptance thereof, certifying that the proposed substitute will be similar and of equal or better substance and quality to that specified, will be suited to the same use and will perform properly the same functions as that specified.

The application will state whether or not acceptance of the substitute for use in the work will require a change in the Drawings or Specifications to adapt the design to the substitute and whether or not incorporation or use of the substitute in connection with the work is subject to payment of any license fee or royalty. All variations of the proposed substitute from that specified shall be identified in the application and available warranties, maintenance, repair and replacement service will be indicated. The application will also contain an itemized estimate of all costs that will result directly or indirectly from acceptance of such a substitute, including costs of redesign and claims of other contractors affected by the resulting change, all of which shall be considered by the Engineer in evaluating the proposed substitute.

The Engineer may require the Contractor to furnish at the Contractor's expense, additional data about the proposed substitute including without limitations the anticipated reduction of the Contract Price. The Engineer will be the sole judge of acceptability and no substitute will be ordered or installed without the Engineer's prior written acceptance. The Owner may require the Contractor to furnish, at the Contractor's expense, a special performance guarantee or other surety with respect to any substitute, including without limitations the anticipated reduction of the Contract Price.

D. Furnishing of Different Materials or Equipment: Substitute and Equal

The following provisions shall apply to the furnishing of materials or equipment that are substitutes for or that are to be considered as equals to those called for in the specifications

As used herein, "substitute" materials or equipment refers to a difference between what the Engineer designed and what the Contractor proposes to provide such that some design change or other accommodation would be required. A substitute would include, but not be limited to, materials or equipment that accomplish the same goal as the specified materials or equipment, but may have different size, shape, electrical characteristics, or structural or mechanical requirements, and, therefore, would require possible redesign by the Engineer, or possible changes in construction.

As used herein, "equivalent" or "equal" materials or equipment refers to materials or equipment that are essentially the same as those which were specified, but come from a different manufacturer, and may therefore have minor differences but do not require any redesign, or construction changes to accommodate.

It shall be the responsibility of the Contractor to ensure that materials and equipment to be furnished, including any substitute or any equal materials or equipment, fit the space available. The Contractor shall make necessary measurements to ascertain space requirements, including those for connections.

All redesign and other additional costs incurred by the Owner as a result of the Contractor's furnishing substitute or equal materials or equipment shall be borne by the Contractor.

All materials and equipment must be new unless expressly stated otherwise in the Contract Documents.

The Contractor is responsible for providing documentation for review by the Engineer of any proposed substitute materials or equipment and any proposed equal materials or equipment so as to enable the Engineer to determine if the proposed materials or equipment are acceptable. For any proposed substitute materials or equipment, the Engineer will record the time required by the Engineer and the Engineer's consultants in evaluating the Contractor's proposals for any substitutions for items named in the specifications and in making changes in the Drawings or Specifications occasioned thereby.

Whether or not the Engineer accepts a proposed substitute, the Contractor shall reimburse the Owner for the charges of the Engineer and the Engineer's consultants for evaluating any proposed substitution for named items. All redesign and other additional costs incurred by the Owner as a result of the Contractor's furnishing substitute materials or equipment shall be borne by the Contractor. The Owner shall bear the cost of reviewing "proposed equivalent or equal" materials and equipment.

Following review and written acceptance by the Engineer and Owner, the Contractor may proceed with ordering and installing the substitute materials and equipment, or the equivalent or equal materials and equipment, as the case may be.

0.29 Construction Terms and Conditions

The bidder is advised that the terms and conditions set forth in the Contract Documents will be rigidly enforced. This Information for Bidders is included as part of the Contract Documents.

0.30 Nondiscrimination Provisions

Bidders are required to comply with all applicable Federal and State Statutes, Rules and Regulations including but not limited to Title VI of the Civil Rights Act of 1964, as amended (42 USC 2000d-2000D-4A) and the discrimination and affirmative action provisions of N.J.S.A. 10:2.1 through 10:2-4, the New Jersey Law against Discrimination, N.J.S.A. 10:5-1, et. seq., and the rules and regulations promulgated pursuant thereto.

Prior to award, the successful bidder must submit a signed certification stating that it and its subcontractors shall comply with the discrimination and affirmative action provisions of N.J.S.A. 10:2-1 through 10:2-4, the New Jersey Law Against Discrimination (N.J.S.A. 10:5-1 et. seq.), and the rules and regulations promulgated pursuant thereto, including but not limited to N.J.A.C. 17:27-1 et. seq.

Successful bidders shall, upon request, submit a list of all subcontractors who will perform work on the project and written signed statements from authorized agents of the labor pools with which they will or may deal for employees on the work, together with supporting information to the effect that said labor pools will affirmatively cooperate in or offer no hindrance to the recruitment, employment, and equal treatment of employees seeking employment and performing work under the contract or, a certification as to what efforts have been made to secure such statements when such agents or labor pools have failed or refused to furnish same prior to the award of the Contract.

0.31 State Mandatory Affirmative Action Language, Construction Contracts

During the performance of this contract, the contractor agrees as follows:

The contractor or subcontractor, where applicable, will not discriminate against any employee or applicant for employment because of age, race, creed, color, national origin, ancestry, marital status, affectional or sexual orientation, gender identity or expression, disability, nationality or sex. Except with respect to affectional or sexual orientation and gender identity or expression, the contractor will ensure that equal employment opportunity is afforded to such applicants in recruitment and employment, and that employees are treated during employment, without regard to their age, race, creed, color, national origin, ancestry, marital status, affectional or sexual orientation, gender identity or expression, disability, nationality or sex. Such equal employment opportunity shall include, but not be limited to the following: employment, up-grading,

demotion, or transfer; recruitment or recruitment advertising; layoff or termination; rates of pay or other forms of compensation; and selection for training, including apprenticeship. The contractor agrees to post in conspicuous places, available to employees and applicants for employment, notices to be provided by the Public Agency Compliance Officer setting forth provisions of this nondiscrimination clause.

The contractor or subcontractor, where applicable will, in all solicitations or advertisements for employees placed by or on behalf of the contractor, state that all qualified applicants will receive consideration for employment without regard to age, race, creed, color, national origin, ancestry, marital status, affectional or sexual orientation, gender identity or expression, disability, nationality or sex.

The contractor or subcontractor, where applicable, will send to each labor union or representative of workers with which it has a collective bargaining agreement or other contract or understanding, a notice, to be provided by the agency contracting officer advising the labor union or workers' representative of the contractor's commitments under this act and shall post copies of the notice in conspicuous places available to employees and applicants for employment.

The contractor or subcontractor, where applicable, agrees to comply with any regulations promulgated by the Treasurer, pursuant to N.J.S.A. 10:5-31 et seq., as amended and supplemented from time to time and the Americans with Disabilities Act.

When hiring or scheduling workers in each construction trade, the contractor or subcontractor agrees to make good faith efforts to employ minority and women workers in each construction trade consistent with the targeted employment goal prescribed by N.J.A.C. 17:27-7.2; provided, however, that the Division may, in its discretion, exempt a contractor or subcontractor from compliance with the good faith procedures prescribed by the following provisions, A, B and C, as long as the Division is satisfied that the contractor or subcontractor is employing workers provided by a union which provides evidence, in accordance with standards prescribed by the Division, that its percentage of active "card carrying" members who are minority and women workers is equal to or greater than the targeted employment goal established in accordance with N.J.A.C. 17:27-7.2. The contractor or subcontractor agrees that a good faith effort shall include compliance with the following procedures:

(A) If the contractor or subcontractor has a referral agreement or arrangement with a union for a construction trade, the contractor or subcontractor shall, within three business days of the contract award, seek assurances from the union that it will cooperate with the contractor or subcontractor as it fulfills its affirmative action obligations under this contract and in accordance with the rules promulgated by the Treasurer pursuant to N.J.S.A. 10:5-31 et. seq., as supplemented and amended from time to time and the Americans with Disabilities Act. If the contractor or subcontractor is unable to obtain said assurances from the construction trade union at least five business days prior to the commencement of construction work, the contractor or subcontractor agrees to afford

equal employment opportunities minority and women workers directly, consistent with this chapter. If the contractor's or subcontractor's prior experience with a construction trade union, regardless of whether the union has provided said assurances, indicates a significant possibility that the trade union will not refer sufficient minority and women workers consistent with affording equal employment opportunities as specified in this chapter, the contractor or subcontractor agrees to be prepared to provide such opportunities to minority and women workers directly, consistent with this chapter, by complying with the hiring or scheduling procedures prescribed under (B) below; and the contractor or subcontractor further agrees to take said action immediately if it determines or is so notified by the Division that the union is not referring minority and women workers consistent with the equal employment opportunity goals set forth in this chapter.

(B) If good faith efforts to meet targeted employment goals have not or cannot be met for each construction trade by adhering to the procedures of (A) above, or if the contractor does not have a referral agreement or arrangement with a union for a construction trade, the contractor or subcontractor agrees to take the following actions:

(1) To notify the public agency compliance officer, the Division, and minority and women referral organizations listed by the Division pursuant to N.J.A.C. 17:27-5.3, of its workforce needs, and request referral of minority and women workers;

(2) To notify any minority and women workers who have been listed with it as awaiting available vacancies;

(3) Prior to commencement of work, to request that the local construction trade union refer minority and women workers to fill job openings, provided the contractor or subcontractor has a referral agreement or arrangement with a union for the construction trade;

(4) To leave standing requests for additional referral to minority and women workers with the local construction trade union, provided the contractor or subcontractor has a referral agreement or arrangement with a union for the construction trade, the State Training and Employment Service and other approved referral sources in the area;

(5) If it is necessary to lay off some of the workers in a given trade on the construction site, layoffs shall be conducted in compliance with the equal employment opportunity and non-discrimination standards set forth in this regulation, as well as with applicable Federal and State court decisions;

(6) To adhere to the following procedure when minority and women workers apply or are referred to the contractor or subcontractor:

(i) If said individuals have never previously received any document or certification signifying a level of qualification lower than that required in order to perform the work of the construction trade, the contractor or

subcontractor shall in good faith determine the qualifications of such individuals. The contractor or subcontractor shall hire or schedule those individuals who satisfy appropriate qualification standards in conformity with the equal employment opportunity and non-discrimination principles set forth in this chapter. However, a contractor or subcontractor shall determine that the individual at least possesses the requisite skills, and experience recognized by a union, apprentice program or a referral agency, provided the referral agency is acceptable to the Division. If necessary, the contractor or subcontractor shall hire or schedule minority and women workers who qualify as trainees pursuant to these rules. All of the requirements, however, are limited by the provisions of (C) below.

(ii) The name of any interested women or minority individual shall be maintained on a waiting list, and shall be considered for employment as described in paragraph (i) above, whenever vacancies occur. At the request of the Division, the contractor or subcontractor shall provide evidence of its good faith efforts to employ women and minorities from the list to fill vacancies.

(iii) If, for any reason, said contractor or subcontractor determines that a minority individual or a woman is not qualified or if the individual qualifies as an advanced trainee or apprentice, the contractor or subcontractor shall inform the individual in writing of the reasons for the determination, maintain a copy of the determination in its files, and send a copy to the public agency compliance officer and to the Division.

(7) To keep a complete and accurate record of all requests made for the referral of workers in any trade covered by the contract, on forms made available by the Division and submitted promptly to the Division upon request.

(C) The contractor or subcontractor agrees that nothing contained in (B) above shall preclude the contractor or subcontractor from complying with the union hiring hall or apprenticeship policies in any applicable collective bargaining agreement or union hiring hall arrangement, and, where required by custom or agreement, it shall send journeymen and trainees to the union for referral, or to the apprenticeship program for admission, pursuant to such agreement or arrangement. However, where the practices of a union or apprenticeship program will result in the exclusion of minorities and women or the failure to refer minorities and women consistent with the county employment goal, the contractor or subcontractor shall consider for employment persons referred pursuant to (B) above without regard to such agreement or arrangement; provided further, however, that the contractor or subcontractor shall not be required to employ women and minority advanced trainees and trainees in numbers which result in the employment of advanced trainees and trainees as a percentage of the total workforce for the construction trade, which percentage significantly exceeds the apprentice to journey worker ratio specified in the applicable collective bargaining agreement, or in the absence of a collective

bargaining agreement, exceeds the ratio established by practice in the area for said construction trade. Also, the contractor or subcontractor agrees that, in implementing the procedures of (B) above, it shall, where applicable, employ minority and women workers residing within the geographical jurisdiction of the union.

After notification of award, but prior to signing a construction contract, the contractor shall submit to the public agency compliance officer and the Division an initial project workforce report (Form AA 201) provided to the public agency by the Division for distribution to and completion by the contractor, in accordance with N.J.A.C. 17:27-7. The contractor also agrees to submit a copy of the Monthly Project Workforce Report once a month thereafter for the duration of this contract to the Division and to the public agency compliance officer.

The contractor agrees to cooperate with the public agency in the payment of budgeted funds, as is necessary, for on-the-job and/or off-the-job programs for outreach and training of minorities and women.

(D) The contractor and its subcontractors shall furnish such reports or other documents to the Division of Public Contracts Equal Employment Opportunity Compliance as may be requested by the Division from time to time in order to carry out the purposes of these regulations, and public agencies shall furnish such information as may be requested by the Division of Public Contracts Equal Employment Opportunity Compliance for conducting a compliance investigation pursuant to Subchapter 10 of the Administrative Code (NJAC 17:27).

0.32 Solid Waste Disposal

The bidder is directed to N.J.A.C. 7:26-1, et. seq., Rules of the Department of Environmental Protection, Division of Solid and Hazardous Waste. The Contractor shall be required to follow the applicable rules and regulations. In general, these regulations require that all solid wastes (including, without limitation, concrete, black top, demolition or construction debris, unacceptable fill, etc.) must be disposed in an approved, licensed disposal facility. Also, any truck hauling this type of material to a landfill must have a permit issued by the Bureau of Registration and Permit Administration, NJ Department of Environmental Protection, 401 East State Street, NJ 08625.

Prior to the removal of any solid waste material from the site, the Contractor shall submit a written statement from a licensed solid waste disposal facility operator which grants the Contractor permission to use the facility for the disposal of materials originating at the Owner's project site.

Under the price bid, the bidder shall include the cost of all permit and disposal fees and hauling costs which may be necessary for compliance with all applicable laws and regulations.

0.33 New Jersey State Sales and Use Tax Exemption

Materials and equipment purchases for permanent installation in the project will be exempt from the New Jersey State Sales and Use Tax. Each Bidder shall take this exemption into account in calculating his bid. It shall be the Contractor's responsibility to file the necessary exemption applications.

0.34 Allowances

The Contractor shall make allowances in his bid prices for furnishing the following allowance items. Details of the materials covered by such allowances will be found under the Specification Section indicated. The amount of the allowance is the direct cost of the items to the Contractor without markup or overheads. Any markup or overhead costs to the Contractor for allowance items shall be separate from the allowance amounts and shall be included in the bid price.

The Contractor will be paid based on the invoiced price from the supplier of the particular item or items. The invoiced price for each item will be totaled (in the case where more than a single item is involved) with the Contractor being paid based on the total invoiced price for the items. A Contract adjustment for the difference between the actual invoiced cost and the Contract allowance will be made through a change order with either a reduction in cost to the contract (if actual invoiced cost is lower than allowance amount indicated below) or an addition to the contract price (if the invoiced cost of the item exceeds the allowance). Costs associated with delivery, shipping, handling and installation are not covered by the allowance amounts. Such costs are to be included in the Contractor's bid price.

The contracting unit shall not be responsible for additional traffic control costs beyond the number of working days specified in the construction contract in accordance with section 17 of P.L.1971, c. 198 (N.J.S.A. 40A:11-17), when such delay is caused by the contractor and liquidated damages have been assessed.

Pursuant to section 16 of P.L. 1971, c. 198 (C.40A:11-16) any project that includes the use of 1,000 tons or more of hot mix asphalt, shall be eligible for any asphalt price adjustment reflecting changes in the cost of asphalt cement. Any project that includes the use of less than 1,000 tons of hot mix asphalt, is ineligible for any asphalt price adjustment, unless during the course of the project including change orders, any quantity of hot mix asphalt exceeds 1000 tons.

The asphalt price adjustment shall be calculated in accordance with the formula and relevant instructions published in the most recent edition of the New Jersey Department of Transportation Standard Specifications for Road and Bridge Construction as revised by the "Standard Inputs" periodically issued by the Department of Transportation. All invoices for payment shall be accompanied by the calculation of any asphalt price

adjustment and a showing of the current month's Asphalt Price Index and the Basic Asphalt Price Index established at the time of Bid.

If the monthly asphalt price index increases 50 percent or more over the basic asphalt price index, do not perform work on Items containing asphalt binder without written approval from the Owner.

Fuel that is eligible for a fuel price adjustment shall be the sum of the quantities of the eligible pay items in the contract times the fuel usage factors as determined by the Department of Transportation. The types of fuel furnished shall be at the option of the contractor.

The fuel requirement for items not determined by the Department of Transportation to be eligible, and for pay items in the bid specifications calling for less than 500 gallons of fuel, shall not be eligible for a fuel price adjustment. If more than one pay item has the same nomenclature but with different thicknesses, depths, or types, each individual pay item must require 500 gallons or more of fuel to be eligible for a fuel price adjustment. If more than one pay item has the exact same nomenclature, similar pay items shall be combined and this combination must require 500 gallons or more of fuel to be eligible for the fuel price adjustment.

Price adjustments may result in an increased payment to the Contractor for increases in the price index and may result in a reduction in payment for decreases in the price index.

For lump sum projects which do not include individual pay items, the pay items shall be as listed below in Table- Fuel Price Adjustment or as per the latest version thereof from New Jersey Department of Transportation.

Fuel price adjustments shall not be made in those months for which the monthly fuel price index has changed by less than five percent from the basic fuel price.

If the Monthly Fuel Price Index increases by 50 percent or more over the Basic Fuel Price Index, do not perform any work involving Items eligible for fuel price adjustment without written approval from the Owner.

Brief Description of Allowance	Amount of Allowance	Bid Item
Traffic Control	$10,000.00	Item 16
Asphalt Price Adjustment	$5,000.00	Item 17
Fuel Price Adjustment	$5,000.00	Item 18

Fuel Price Adjustments	
Items	**Fuel Usage Factor**
EXCAVATION, UNCLASSIFIED	**0.5 Gallons per Cubic Yard**
EXCAVATION, REGULATED MATERIAL	**0.5 Gallons per Cubic Yard**
EXCAVATION, ACID PRODUCING SOIL	**0.5 Gallons per Cubic Yard**

Fuel Price Adjustments	
REMOVAL OF PAVEMENT	0.25 Gallons per Square Yard
HMA MILLING, 3" OR LESS	0.25 Gallons per Square Yard
HMA MILLING, MORE THAN 3" TO 6"	0.25 Gallons per Square Yard
CONCRETE MILLING,	0.25 Gallons per Square Yard
HMA PROFILE MILLING	0.25 Gallons per Square Yard
BREAKING PAVEMENT	0.25 Gallons per Square Yard
RUBBLIZATION	0.25 Gallons per Square Yard
SUBBASE	1 Gallon per Cubic Yard
I- SOIL AGGREGATE	1 Gallon per Cubic Yard
SOIL AGGREGATE BASE COURSE, " THICK	0.30 Gallon per Square Yard per Inch
SOIL AGGREGATE BASE COURSE, VARIABLE THICKNESS	1 Gallon per Cubic Yard
DENSE-GRADED AGGREGATE BASE COURSE, ___ " THICK	0.30 Gallon per Square Yard per Inch
DENSE-GRADED AGGREGATE BASE COURSE, VARIABLE THICKNESS	1.00 Gallon per Cubic Yard
CONCRETE BASE COURSE, " THICK	0.25 Gallons per Square Yard
CONCRETE BASE COURSE, REINFORCED ___ " THICK	0.25 Gallons per Square Yard
ASPHALT STABILIZED DRAINAGE COURSE	2.50 Gallons per Ton
OPEN-GRADED FRICTION COURSE	2.50 Gallons per Ton
MODIFIED OPEN-GRADED ___ FRICTION COURSE	2.50 Gallons per Ton
ULTRA-THIN FRICTION COURSE	2.50 Gallons per Ton
HOT MIX ASPHALT SURFACE COURSE	2.50 Gallons per Ton
HOT MIX ASPHALT ___ ___ ___ INTERMEDIATE COURSE	2.50 Gallons per Ton
HOT MIX ASPHALT BASE COURSE	2.50 Gallons per Ton
STONE MATRIX ASPHALT SURFACE COURSE	2.50 Gallons per Ton
CONCRETE SURFACE COURSE, " THICK	0.25 Gallons per Square Yard
DIAMOND GRINDING OF CONCRETE SURFACE COURSE	0.25 Gallons per Square Yard
DIAMOND GRINDING EXISTING CONCRETE PAVEMENT	0.25 Gallons per Square Yard
CONCRETE BRIDGE APPROACH	0.50 Gallons per Cubic Yard

Fuel Price Adjustments	
CONCRETE CULVERT	1.00 Gallon per Cubic Yard
CONCRETE FOOTING	1.00 Gallon per Cubic Yard
CONCRETE WING WALL	1.00 Gallon per Cubic Yard
CONCRETE PIER COLUMN Protection, HPC	1.00 Gallon per Cubic Yard
CONCRETE PIER COLUMNS AND CAP	1.00 Gallon per Cubic Yard
CONCRETE ABUTMENT WALL	1.00 Gallon per Cubic Yard
CONCRETE PIER SHAFT	1.00 Gallon per Cubic Yard
CONCRETE PEDESTRIAN BRIDGE	1.00 Gallon per Cubic Yard
CONCRETE Bridge DECK	1.00 Gallon per Cubic Yard
CONCRETE Bridge DECK, HPC	1.00 Gallon per Cubic Yard
CONCRETE BRIDGE SIDEWALK	1.00 Gallon per Cubic Yard
CONCRETE BRIDGE SIDEWALK HPC	1.00 Gallon per Cubic Yard
CONCRETE Bridge PARAPET	1.00 Gallon per Cubic Yard
CONCRETE Bridge PARAPET HPC	1.00 Gallon per Cubic Yard
CAST-IN-PLACE CONCRETE PILES, DRIVEN ___ " DIAMETER	1.00 Gallon per Cubic Yard
RETAINING WALL, LOCATION NO.	0.10 Gallon per Square Foot
NON-VEGETATIVE SURFACE, HOT MIX ASPHALT	2.50 Gallons per Ton
COLOR-COATED NON-VEGETATIVE SURFACE, HOT MIX ASPHALT	2.50 Gallons per Ton

0.35 Department of Labor, Safety and Health Regulations

The Contractor shall comply with all applicable requirements of the Federal Department of Labor Safety and Health Regulations for construction promulgated under the Occupational Safety and Health Act of 1972 (P.L. 91-596) and under Section 107 of the Contract Work Hours and Safety Standards Act (P.L. 91-54).

0.36 Prompt Payment

Provided the Contractor is performing all obligations required under the Contract Documents, the Owner agrees to make payment to the Contractor at least once each month as the work progresses and to retain only such amounts as may be permitted by law and the Contract Documents.

0.37 Construction Plans and Specifications

Upon award of the Contract, the Contractor may obtain, free of charge, four (4) complete sets of Drawings and Specifications. Additional sets of Drawings and Specifications may be purchased by the Contractor for the deposit amount set forth in the Notice to Bidders.

0.38 Bidders Referred to Laws and Safety

The attention of the bidders is especially directed to the provisions of Federal, State, County and Municipal laws, statutes and regulations that may apply to the work, including particularly all safety regulations. The provisions of the U.S. Occupational Safety and Health Act (OSHA) and its implementing regulations and all safety standards promulgated thereunder shall be observed by the Contractor in the performance of the Contract, whether or not they would otherwise be applicable.

Such provisions refer to obstruction of streets, traffic safety, open burning, maintaining of signals, excavation, storing and handling of explosives, etc. Particular note is to be taken also of those provisions affecting the Contractor and his employees in the prosecution of the work and his relation to any political subdivision or person. All applicable laws, statutes, ordinances and regulations shall be obeyed and complied with by the Contractor, his subcontractors and all of his representatives, including, without limitation, all applicable provisions of Federal and New Jersey State Labor Laws.

The Contractor shall be solely and completely responsible for conditions in, on or near the job site, including safety of his operations during performance of the work. This requirement will apply continuously 24 hours a day until final acceptance of the work by the Owner and shall not be limited to normal working hours.

Construction observation of the Contractor's performance by the Engineer is not intended to and shall not include review of the adequacy of the Contractor's safety measures, in, on or near the construction site.

The Contractor shall provide to the Owner and the Engineer, in writing, prior to beginning any work, the names and emergency telephone numbers of the Contractor's "competent person" or "competent persons" as defined in 29 CFR Section 1926.32 (f), one or more of whom shall be present at the construction site at all times, whenever construction activities are taking place. Prior to beginning any work, the Contractor shall also submit emergency action plans, where applicable and as required by OSHA, Title 29 CFR, Part 1910 and Part 1926. In addition to any required by OSHA, a written emergency action plan shall be required for confined space entry, trenching/excavation, underground and overhead utilities.

Where work activities are performed in or adjacent to roadways, the Contractor is required to conform to the "U.S. Department of Transportation, Federal Highways Administration, Part VI, Standards and Guides for Traffic Controls for Street and Highway Construction, Maintenance, Utility, and Incident Management Operations, Uniform Traffic Control Devices (MUTCD) 1988 edition, revision 3, September 3, 1993"

and latest revisions. In particular where work activities are performed in or adjacent to roadways, the Contractor shall be required to provide a "Buffer Space" as required under 7C-2c.(3a & b) of the above standards. Also, traffic controls such as drums used for traffic warning or channelization and barricades for control of traffic shall be installed in accordance with 6F-5e. thru g. of the above standards. Where the work activities are performed in or adjacent to roadways where the "Buffer Space" cannot be achieved, a detour of traffic around the roadway shall be provided.

In addition, no work shall commence without the Contractor contacting the utility mark-out firm (1-800-272-1000) or any other utilities not contracted with the utility mark-out firm for a mark-out prior to construction. In addition, prior to commencing any work, if the utility mark-out firm or other utilities have been contacted for a mark-out and there have been no utilities marked on the ground when work is ready to commence, the Contractor is not to assume that there are no utilities in the area and shall confirm this by recontacting the utility mark-out firm and/or utility companies to insure that there are in fact no utilities in the area.

0.39 Subcontractor Requirements

The laws pertaining to public bidding in the State of New Jersey on contracts for the erection, alteration or repair of any public building, require that a prime contractor list his subcontractors at the time of bid for any of the following subcontracted work:

(1) The plumbing and gas fitting and all kindred work;

(2) Steam power plants, steam and hot water heating and ventilating apparatus and all kindred work;

(3) Electrical work; and

(4) Structural steel and ornamental iron work.

Whenever a bid sets forth **more than one** subcontractor for any of the specialty trade categories (1) through (4) specified hereinabove in this section, the bidder shall submit to the Owner a certificate signed by the bidder listing each subcontractor named in the bid for that category. The certificate shall set forth the scope of work for which the subcontractor has submitted a price quote and which the bidder has agreed to award to each subcontractor should the bidder be awarded the contract. The certificate shall be submitted to the Owner simultaneously with the list of the subcontractors. The certificate may take the form of a single certificate listing all subcontractors or, alternatively a separate certificate may be submitted for each subcontractor. If a bidder does not submit a certificate or certificates to the Owner, the Owner shall award the contract to the next lowest responsible bidder. The bidder may also be required to identify any subcontractors other than the trades described above.

0.40 Pre-Construction and Construction Conferences

Before construction is started, preconstruction conferences shall be held. During the first conference the Owner, his Engineer, the Contractor, and officials of the New Jersey Department of Environmental Protection will discuss the procedures to be followed by the Contractor during the construction process.

The Contractor will also be required to attend a preconstruction conference attended by all utility companies and State and local authorities.

During the construction, job meetings shall be held at frequent intervals to review construction and restoration progress and to resolve difficulties which might delay completion of the work. Attendees at these meetings shall include representatives of the Owner, the Engineer and the Contractor.

0.41 Federal Labor Standards and Federal Wage Rates

The Contractor and all Subcontractors shall comply with all applicable Regulations of the Secretary of Labor, made pursuant to the Anti-Kickback Act of June 30, 1940, 40 U.S.C. 276(c) and any amendments or modifications hereto. The Contractor and all Subcontractors shall furnish the Owner the weekly Statements of Compliance. In the case of Subcontractors, the Contractor shall cause appropriate provisions to be inserted in any subcontracts for the work which he may let to ensure compliance with said Anti-Kickback Act by all Subcontractors subject thereto, and the Contractor shall be responsible for the submissions of all Statements of Compliance required of Subcontractors by said Anti-Kickback Act except as the Secretary of Labor may specifically provide for reasonable limitations, variations, and exemptions from the requirements thereof. These regulations are part of this Contract and are incorporated by reference into the Contract Documents as if set forth at length herein. Payroll and Anti-Kickback Statements shall be submitted weekly for each and every Subcontractor on the project subject thereto and shall be permitted on a form equal to Form WH-347.

The Contractor and all Subcontractors shall pay to all laborers and mechanics employed for the construction covered by this Contract the minimum rates of pay as determined by the Secretary of Labor in accordance with the Act of March 3, 1931, as amended, known as the David-Bacon Act (40 U.S.C. 276(a) through 276(a-5). Furthermore, the Contractor and Subcontractor shall adhere to the applicable stipulations and provisions published by the United States Environmental Protection Agency, entitled, "Labor Standards Provisions for Federally Assisted Construction Contracts". The applicable Federal Wage Rate Determinations, as prepared by the Secretary of Labor and the "Labor Standards" are incorporated by reference into the Contract Documents as if set forth at length herein.

0.42 State Wage Rates and Contractor Registration

The Contractor's attention is directed to the prevailing wage rates listed on the SWR pages and to the applicable provisions of the New Jersey Prevailing Wage Act, Chapter 150, of the Laws of 1963 as amended, governing the prevailing rates of wages for workmen who are employed on this project. All applicable provisions of said Prevailing Wage Act and Amendments thereto shall be considered part of this Contract and made a part hereof.

The Bidder does also declare and represent that in the event of any change of such prevailing rates at any time before the execution and delivery of the Contract between the Bidder and the Owner for the work of construction of the project, or at any time thereafter, the new rates, if applicable, will become minimum rates for work performed thereafter under said Contract. No increase in the Contract price shall be claimed by the Bidder and no such increase will be granted by the Owner as a result of such change.

The Contractor is specifically directed to the following requirements as set forth by the Act (to the extent applicable):

a. All workmen engaged in the performance of services directly under this public work Contract shall be paid not less than the prevailing rate of wages as specified.

b. Each Contractor and subcontractor shall keep an accurate record showing the name, craft trade, and actual hourly rate of wages paid to each workman employed by him in connection with said public work. Records shall be preserved for two years from date of payments.

c. The Contractor and Subcontractor shall post the prevailing wage rates for each craft and classification involved, as determined by the Commissioner of Labor and Industry, including the effective date of any changes thereof, in prominent and easily accessible places at the site of the work, or at such place or places as are used by them to pay workmen their wages.

d. In the event that it is found that any workman employed by the Contractor or any Subcontractor covered by such a Contract is paid less than the required wage rates, the Owner may terminate the Contractor's or Subcontractor's right to proceed with the work, or such part of the work as to which there has been a failure to pay required wages, and to prosecute the work to completion or otherwise, and the Contractor and his Surety shall be liable to the Owner for any excess costs occasioned thereby.

e. The Contractor and Subcontractors shall file written statements to the Owner certifying to the amounts then due and owing from them to any and all workmen or wages due on account of said work. Said statements shall be filed prior to the final payment certificate and again prior to the final payment of any retained percentage funds by the Owner. The statements shall set forth the names of the persons whose wages are unpaid (if any) and the amount due to each. The statements shall be verified by the oath of the Contractor or Subcontractor as the case may be.

f. Whenever the State and Federal Wage Rate Determinations list different minimum rates of pay for the same class of worker, the Contractor and all Subcontractors shall pay the higher of the two rates.

g. Fringe benefits are part of prevailing wage rates; employers not paying these fringe benefits to a party designated in a collective bargaining agreement shall pay benefits directly to employee on each pay day.

Each bidder shall read carefully and fully said published wage rates, and shall predicate and bid on said rates as minimum requirements. Submission of bid shall imply that Bidder has carefully inspected all said wage rates, that the Bidder is thoroughly familiar with all provisions of the Prevailing Wage Act and that should he be awarded a contract, he will fully and faithfully comply with all provisions of the Prevailing Wage Act.

The Bidder's attention is directed to the provisions of P.L. 1999, c. 238 (N.J.S.A. 34:11-56.48, The Public Works Contractor Registration Act), which requires registration with the New Jersey Department of Labor as a condition to bidding on or engaging in a contract for a public work, as defined therein.

The referenced Act became effective April 11, 2000 and revisions became effective August 16, 2003 and pertains to Contractors who perform work subject to the New Jersey Prevailing Wage Act.

Unless the Bidder has registered with the New Jersey Department of Labor, the bid will be considered non-responsive.

0.43 Change Orders

During the course of the construction of the Project, it may be necessary to make modifications to the Contract. If a modification should become necessary, it shall be made only in writing and in accordance with the terms of the Contract.

0.44 Project Observation

The Contractor's attention is directed to the fact that Mott MacDonald, Iselin, New Jersey, or any other Engineer authorized by the Owner, will provide observation services in accordance with NJAC 7:22-3.17(a) 28 & 29, which will include observing the progress and quality of the executed work and determining, in general, if the work is proceeding in accordance with the Contract Documents, and in accordance with NJAC 7:22-10.12, construction phase requirements as provided in the Supplemental General Conditions.

0.45 Observer's Service for Saturdays, Sundays, Holidays and Off-Hours

The excess cost of wages, overhead and fees of observers employed or engaged by the Owner shall be paid by the Owner except that the cost of such services required any time on Saturdays, Sundays, or legal holidays, or on weekdays outside the hours of 8:00 A.M. to 4:30 P.M. inclusive, shall be borne by the Contractor if the Owner so elects. The Owner reserves the right to deduct from the Contractor's payments, as reimbursement, which shall be retained by the Owner, an amount sufficient to cover the excess cost of wages, overhead and fees paid by the Owner to any observer or observers necessarily employed on the work outside the above-mentioned times, such amount to be determined on the basis of actual cost of wages, overhead and fees.

For purposes of this clause, the term "excess cost" refers to overtime premia, etc., caused by the non-regular work days and hours.

0.46 American Goods and Products

All bidders are advised that in accordance with the requirements of the Local Public Contracts Law, N.J.S.A. 40A:11-18 only manufactured and farm products of the United States, wherever available, shall be used in the Contract work. If the use of foreign products is required, the advance written approval of the Owner and Assistant Director, Municipal Finance and Construction Element (MFCE) of NJDEP is required.

In accordance with the American Iron and Steel (AIS) requirements of the Consolidated Appropriations Act, 2014, all of the iron and steel products used in this project must be produced in the United States unless a waiver of the requirement is approved by the Owner and NJDEP. Please refer to Appendix A "Implementation of American Iron and Steel provisions of P.L. 113-76, Consolidated Appropriations Act, 2014" for AIS requirement details.

An iron or steel product is one of the following made primarily of iron or steel that is permanently incorporated into the public water system or treatment works:

Lined or unlined pipes or fittings;
Manhole covers;
Municipal Castings (refer to Appendix A for further detail)
Hydrants;
Tanks;
Flanges;
Pipe clamps and restraints;
Valves;
Structural steel (refer to Appendix A for further detail);
Reinforced precast concrete; and
Construction materials (refer to Appendix A for further detail).

0.47 Eligible Socially and Economically Disadvantaged (SED) Firms

This Contract is funded in part by New Jersey Environmental Infrastructure financing programs and the successful bidder must comply with all the provisions of N.J.A.C. 7:22-9.1 et. seq. for the participation of small business enterprises owned and controlled by socially and economically disadvantaged individuals. In accordance with the provisions of N.J.S.A. 58:11-26, N.J.A.C. 7:22-3.17(a)24 and 4.17(a)24, the Contractor (and Subcontractors) shall comply with all the provisions of N.J.A.C. 7:22-9.

The Owner has submitted a SED Utilization Plan to the NJDEP Office of Equal Opportunity and Public Contract Assistance (NJDEP OEOPCA) in which the Owner commits to the use of socially and economically disadvantaged (SED) firms with a goal of 10% of the value of the work under the Contract and, in conformity with N.J.A.C. 7:22-3.17, the Contractor shall submit its own SED Utilization Plan to the NJDEP OEOPCA, with a copy to Owner, within thirty (30) days of Contract award indicating how its goal will be achieved by the Contractor for the duration of the Project, in accordance with N.J.A.C. 7:22-3.17 and 7:22-9, et seq. Detailed information is contained in the pages of the Contract Documents, entitled "Supplemental General Conditions".

0.48 Access to the Work and Records

The representatives of the Federal Department of Labor, the New Jersey Department of Environmental Protection and the New Jersey Department of Labor and any other governmental entity having jurisdiction shall be afforded access to the work and project records under this contract. The Contractor shall provide proper facilities for such access and inspection.

0.49 Joint Venture Bidder Responsibility

Joint Venture bidders must submit a true and correct copy of their Joint Venture agreement. That document must include:

1. A detailed description of the specific purpose to be accomplished by the Joint Venture.
2. The date on which the Joint Venture was formed.
3. Complete contact information for each Joint Venture Partner.
4. Names and titles of each Joint Venture representative authorized to execute documents on behalf of the Joint Venture.
5. The specific responsibility of each Joint Venture partner.

Joint Venture bidders must also insure that any Performance Bonds, Certificates of Insurance, or other security devices be issued to and on behalf of the EXACT legal name of the Joint Venture.

Each Joint Venture Partner must have sufficient experience in its particular area of expertise in order to satisfy the Project Owner and its Consulting Engineer that the Contract will be fully and timely performed.

0.50 Quality of Materials and Workmanship

The attention of bidders is directed to the exacting requirements of the Contract requiring the Contractor to provide safe, watertight and otherwise adequate structures. The bidder shall realize fully that the first class materials and workmanship specified must be supplied in full measure in order to produce acceptable structures and equipment of the kind specified and as designed to give uninterrupted service for an extended period.

0.51 Dewatering Facilities

The Contractor shall provide suitable and adequate dewatering equipment to ensure satisfactory construction and maximum progress.

0.52 Connections to Existing Mains and Valve Operation

All connections to existing piping and facilities shall be made only after receiving permission from the Owner. Existing valves shall be operated only by the Owner's personnel.

0.53 Interruption in Traffic Flow and Traffic Control

The plan for proposed interruptions or detouring of traffic shall be submitted to the Police Department for approval. Contractor shall notify the Municipal Clerk, Police Department, Fire Department, Emergency Medical Services and Transportation Coordinator of all Boards of Education serving the project area of approved traffic detour plans at least forty-eight (48) hours prior to their implementation. Refer to Information for Bidders Section 0.38, "Bidders Referred to Laws and Safety". The Owner shall be responsible for paying all costs associated with the employing of off-duty uniformed police officers, if required. Only off-duty uniformed police traffic directors shall be employed on this project. The number of off-duty police officers and actual hours that will be required is at the discretion of the Police Department. Refer to Information for Bidders Section 0.38, "Bidders Referred to Laws and Safety", Section 0.34 "Allowances", Special Conditions, and Technical Specifications for additional information on Traffic Control.

The contracting unit shall not be responsible for additional traffic control costs beyond the number of working days specified in the construction contract in accordance with section 17 of P.L.1971, c. 198 (N.J.S.A. 40A:11-17), when such delay is caused by the contractor and liquidated damages have been assessed.

0.54 Right-to-Know Labeling

All containers are required to provide New Jersey Right-to-Know labeling.

All containers, including shipping cartons, shall bear a label indicating the chemical name(s) and Chemical Abstracts Service number(s) of all hazardous substances in the container, and all other substances which are among the five most predominant substances in the container, or their trade secret registry number(s). (NJAC 8:59-5).

"Container" means a receptacle used to hold a liquid, solid or gaseous substance such as bottles, bags, barrels, boxes, cans, cylinders, drums and shipping cartons. (NJAC 8:59-1.3).

0.55 Extra Material on Hand

Existing facilities which are to be expanded or modified are sized and located in accordance with the best information available. The Contractor shall be prepared to accommodate changes in the size or location by maintaining at the job site additional pipe, fittings and valves in the ranges of sizes being dealt with. This additional material shall be available to prevent delays in construction.

0.56 Reference to General Requirements and Special Conditions

The attention of bidders is specifically directed to the General Requirements, and the Special Conditions of the specifications.

0.57 NJDEP and Environmental Infrastructure Trust Right to Stop Work

The NJDEP may order work to be stopped under this Contract for good cause pursuant to N.J.A.C. 7:22-3.43 and 7:22-4.43. Such stoppage may be treated under the clauses of this Contract, entitled "Suspension of Work, Delay and No Damages for Delay" and/or "Rights of Owner to Terminate the Contract or Give a Three (3)-Day Deficiency Notice".

0.58 Debarment

No recipient shall enter into a contract for work on environmental infrastructure facilities with any person debarred, suspended or disqualified from Department contracting pursuant N.J.A.C. 7:1D-2.

Recipients shall insert in every contract for work on a project a clause stating that the contractor may be debarred, suspended or disqualified from contracting on any project financially assisted by the State or the Department if the contractor commits any of the acts listed in N.J.A.C. 7:1D-2.2.

The recipient, prior to acceptance of Trust loan moneys, shall certify that no contractor or subcontractor is included on the State Treasurer's list of the debarred, suspended or

disqualified bidders as a result of action by a State Agency in addition to that of the Department of Environmental Protection. If Trust loan moneys are used for disbursement to a debarred firm, the Trust reserves the right to immediately terminate (N.J.A.C. 7:22-4.44) the Trust loan and /or take such other action pursuant to N.J.A.C. 7:1D-2 as is appropriate.

Whenever a bidder is debarred, suspended or disqualified from Department contracting pursuant to N.J.A.C. 7:1D-2, the recipient may take into account the loss of Trust loan moneys under these regulations which result from awarding a contract to such bidder, in determining whether such bidder is the lowest responsive and responsible bidder pursuant to law, and the recipient may advise prospective bidders that these procedures shall be followed.

Any person included on the State Treasurer's list as a result of action by a State agency, who is or may become a bidder on any contract which is or shall be funded by a Trust loan under this subchapter, may present information to the Trust why this section should not apply to such person. If the Trust determines that it is essential to the public interest and files a finding thereof with the New Jersey Attorney General, the Trust may grant an exception from the application of this section with respect to a particular contract, in keeping with N.J.A.C. 7:1D-2.9. In the alternative, the Trust may suspend or debar any such person, or take such action as may be appropriate, pursuant to N.J.A.C. 7:1D-2.

0.59 Americans With Disabilities Act (Equal Opportunity for Individual with Disabilities)

The Contractor and the Owner do hereby agree that the provision of Title II of the Americans With Disabilities Act of 1990 (the "Act") (42 U.S.C. 12101 et. seq.), which prohibits discrimination on the basis of disability by public entities in all services, programs, and activities provided or made available by public entities, and the rules and regulations promulgated pursuant thereunto, are made a part of this Agreement. In providing any aid, benefit, or service on behalf of the Owner pursuant to this Agreement, the Contractor agrees that the performance shall be in strict compliance with the Act. In the event that the Contractor, its agents, servants, employees, or subcontractors violate or are alleged to have violated the Act during the performance of this Agreement, the Contractor shall defend the Owner in any action or administrative proceeding commenced pursuant to this Act. The Contractor shall indemnify, protect, and save harmless the Owner, its agents, servants and employees from and against any and all suits, claims, losses, demands or damages of whatever kind or nature arising out of or claimed to arise out of the alleged violation. The Contractor shall, at its own expense, appear, defend and pay any and all charges for legal services and any and all costs and other expenses arising from such action or administrative proceeding or incurred in connection therewith. In any and all complaints brought pursuant to the Owner's grievance procedure, the Contractor agrees to abide by any decision of the Owner which is rendered pursuant to said grievance procedure. If any action or administrative proceeding results in an award of damages against the Owner or if the Owner incurs any expense to cure a violation of the Act which

has been brought pursuant to its grievance procedure, the Contractor shall satisfy and discharge the same at its own expense.

The Owner shall, as soon as practicable after a claim has been made against it, give written notice thereof to the Contractor along with full and complete particulars of the claim. If any action or administrative proceeding is brought against the Owner or any of its agents, servants, and employees, the Owner shall expeditiously forward or have forwarded to the Contractor every demand, complaint, notice, summons, pleading or other process received by the Owner or its representatives.

It is expressly agreed and understood that any approval by the Owner of the services provided by the Contractor pursuant to this Agreement will not relieve the Contractor of the obligation to comply with the Act and to defend, indemnify, protect, and save harmless the Owner pursuant to this Paragraph.

It is further agreed and understood that the Owner assumes no obligation to indemnify or save harmless the Contractor, its agents, servants, employees and subcontractors for any claim which may arise out of their performance of this Agreement. Furthermore, the Contractor expressly understands and agrees that the provisions of this indemnification clause shall in no way limit the Contractor's obligations assumed in this Agreement, nor shall in no way limit the Contractor's obligations assumed in this Agreement, nor shall they be construed to relieve the Contractor from any liability, nor preclude the Owner from taking any other actions available to it under any other provisions of this Agreement or otherwise at law.

0.60 Security Measures of Owner

All Bidders shall become familiar with the Owner's security measures prior to the time of bid. The bid shall take into consideration any cost or effect on performance resulting from the Owner's requirements and limitations as it pertains to access and use of the Owner's facilities.

0.61 Business Registration Certificate for Bidder and Subcontractors

The Bidder's attention is directed to the provisions of P.L. 2004, c. 57 (N.J.S.A. 52:32-44) which requires registration with the New Jersey Department of Treasury, Division of Revenue as a condition to bidding on or engaging in a contract that is publicly bid.

Bidders and their subcontractors of any tier must comply with the provisions of P.L. 2004, c. 57 (N.J.S.A. 52:32-44). Pursuant to N.J.S.A. 40A:11-16, Bidder shall submit a copy of its Business Registration Certificates issued by the New Jersey Department of Treasury, Division of Revenue to the Owner prior to Contract Award. Bidder shall also submit copies of the Business Registration Certificates of all subcontractors required to be listed by the Bidder on the "Listing of Subcontractors

to be Used" form of the Bid pages of the Contract Documents. Submission of the Business Registration Certificate for the Bidder and all subcontractors is mandatory for Contract Award.

Bidder and all subcontractors required to be listed by the Bidder must be registered with the New Jersey Department of Treasury, Division of Revenue, at the bid submission date.

0.62 Value Engineering Construction Change Orders

All construction contracts issued by Owner shall allow for Value Engineering Construction Change Orders to be approved after the award of the Contract provided that the total price of the originally awarded Contract equals or exceeds $5,000,000. All Value Engineering Construction Change Orders shall be conducted in strict conformance with N.J.S.A. 40A:11-16.6.

The term "proposal" as used herein is construed to mean a Value Engineering Construction Proposal submitted by the Contractor for changing the Plans, Specifications, or other requirements of the Contract. This section conforms to the provisions of N.J.S.A. 40A:11-16.6. Value Engineering Construction Proposals shall conform with the provisions of this section.

The intent of Value Engineering is for the Owner to share with the Contractor any cost savings generated on the Contract as a result of a proposal or proposals offered by the Contractor, after contract award, and approved by the Owner. The purpose of Value Engineering is to encourage the use of the Contractor's ingenuity and experience in arriving at alternative, lower cost or time-saving construction methods other than those reflected in the Contract Documents, by the sharing of savings resulting therefrom. The proposals contemplated are those that could produce a savings to the Owner without, in the judgment of the Owner's Engineer and approved by the Owner, impairing essential functions and characteristics of the Project or a portion of the Work involved. They include but are not limited to safety, service life, stage construction, economy of operation, ease of maintenance, and desired appearance.

An initial proposal submission by the Contractor is required to implement the Value Engineering process. The initial proposal shall outline the general technical concepts associated with the proposal and the estimated contract savings that will result.

The initial proposal will be reviewed by the Owner and its Engineer, and if found to be conceptually acceptable, approval for the Contractor to submit a final proposal will be granted by the Owner. A finding of conceptual acceptability of the initial proposal in no way obligates the Owner or its Engineer to approve the Contractor's final proposal. The Contractor shall have no claim against the Owner or its Engineer as a result of the rejection of any such initial or final proposal.

Final proposals by the Contractor will be considered only after Owner approval of the initial proposal. Final proposals will not be considered if submitted after 50 percent completion of the Work has occurred, based on monthly estimates amounting to more than 50 percent of the total Contract price (subject to any approved adjustments), or if in the opinion of the Owner, insufficient Contract time is available to perform the proposed change in Scope of Work. As a minimum, the following materials and information shall be submitted with each final proposal plus any additional information requested by the Owner or its Engineer:

a. A statement that the final proposal is submitted as a Value Engineering Construction proposal.

b. A description of the difference(s) between the existing Contract requirements and the proposed change(s), and the comparative advantages and disadvantages of each, including considerations of safety, service life, economy of operations, stage construction, ease of maintenance, and desired appearance.

c. Complete plans, specifications, and calculations showing the proposed revisions relative to the original Contract features and requirements. All plans and engineering calculations shall bear the signature of a Professional Engineer licensed to practice in the State of New Jersey. The Professional Engineer shall be retained by the Contractor.

d. A complete cost analysis indicating the final estimated costs and quantities to be replaced by the proposal(s), the new costs and quantities generated by the final proposal(s), and the cost effects of the proposed change(s) on operational, maintenance, and other considerations.

e. A specific date by which a Change Order adopting the final proposal must be executed so as to obtain the maximum cost reduction during the remainder of the Contract. This date must be selected to allow the Owner ample time, usually a minimum of 45 days, for review and processing of Change Order. Should the Owner find that insufficient time is available for review and processing, it may reject the final proposal solely on such basis at no additional cost to the Owner or Engineer.

f. A statement as to the effect the final proposal has on the Contract Time.

g. A description of any previous use or testing of the final proposal on another Owner project or elsewhere and the conditions and results therewith. If the final proposal was previously submitted on another Owner project, indicate the date, the project, and the action taken by the Owner.

Proposals will be considered only after Award of Contract and only when all of the following conditions are met:

a. The Contractor is cautioned not to base any bid prices on the anticipated approval of a Value Engineering Construction proposal(s) and to recognize

that such proposal(s) may be rejected. In the event of rejection, the Contractor is required to complete the Contract according to the original Plans and Specifications and the prices initially bid and accepted by the Governing Body at no additional cost to the Owner.

b. All proposals, approved or not approved by the Owner for use in the Contract, apply only to the ongoing Contract or Contracts referenced in the proposal. The proposals shall become the property of the Owner and shall contain no restrictions imposed by the Contractor on their use or disclosure. The Owner will have the right to use, duplicate, and disclose in whole or in part any data necessary for the utilization of the proposal. The Owner retains the right to use any accepted proposal or part thereof on any other or subsequent project without any obligation to the Contractor. This provision is not intended to deny rights provided by law with respect to patented materials or processes.

c. If the Owner already has under consideration certain revisions to the Contract that are subsequently incorporated in a proposal, the Owner will reject the Contractor's proposal and may proceed with such revisions without any Value Engineering obligation to the Contractor.

d. The Contractor shall make no claim against the Owner or Owner's agents for any costs or delays due to the Owner's rejection of a proposal(s), including but not limited to development costs, anticipated profits, or increased materials or labor costs resulting from delays in the review of such proposal(s).

e. The Owner's Engineer will evaluate and recommend to the Owner whether a proposal qualifies for consideration and further evaluation. The Owner may reject any proposal which is not consistent with the basic design criteria for the Project.

f. The Engineer may recommend to the Owner the rejection of all or any portion of Work performed pursuant to an approved proposal if the Engineer determines that unsatisfactory results are being obtained. The Engineer may direct the removal of such rejected Work and require the Contractor to proceed according to the original Contract requirements without reimbursement for any Work performed under the proposal, or for its removal. Where modifications to the proposals are approved to adjust to field or other conditions, reimbursement is limited to the total amount payable for the Work at the Contract prices as if it were constructed according to the original Contract requirements. Such rejection or limitation of reimbursement does not constitute the basis of any claim against the Owner or it's Engineer for delay or for any other costs.

g. Proposals will be considered only if equivalent options are not already provided in the Contract Documents.

h. The proposal shall be made based on items of work scheduled to be performed by the Contractor. Anticipated cost savings based on revisions of utility relocations or

other similar items to be done by others will not be considered. Proposals that may increase the cost of Work done by others may be considered.

i. If additional information is needed to evaluate proposals, this information must be provided by the Contractor in a timely manner. Such additional information could include, where design changes are proposed, results of field investigations and surveys, design computations, and field change sheets.

The Owner's Engineer shall prepare a written report for the Owner that shall evaluate the Value Engineering Construction Proposal, make a recommendation on whether or not it should be accepted, rejected, or modified, and state to the Owner and contractor the amount of any projected cost savings to each party.

The proposal(s) shall not be approved unless the Engineer reports to the Owner that the proposal appears consistent with the required performance, quality, reliability, and safety of the project and does not impair any of the essential functions, or characteristics of the project, or any portion of the work involved.

If the Owner fails to respond to the final proposal by the date specified, the Contractor shall consider the final proposal rejected and shall make no claim against the Owner as a result thereof.

The Owner shall have the sole discretion to approve or disapprove a Value Engineering Construction Proposal at no additional cost to the Owner. The Contractor shall be solely responsible for its costs.

If the proposal is accepted by the Owner, the changes will be authorized by Change Order. Payment(s) will be made as follows:

a. The change(s) will be incorporated into the Contract by adjustments in the quantities of Pay Items, agreed upon Extra Work Items or by Force Account, as appropriate, according to the Specifications.

b. Once the project is completed, the Owner's Engineer shall verify the cost savings to reflect the actual cost of the work, and such verified cost saving shall be the basis for the savings shared equally between the Owner and Contractor. The costs of such verification shall be borne equally by both parties.

c. The Owner's costs for review and processing of the proposal will be deducted from the savings. The cost of the Owner's Engineer to verify the savings shall be apportioned equally between the parties.

d. The Contractor's costs for development, design, and implementation of the proposal are not eligible for reimbursement.

e. The Contractor may submit proposals for an approved Subcontractor, provided that reimbursement is made by the Owner to the Contractor and that

the terms of the remuneration to the Subcontractor are satisfactorily negotiated and accepted before the proposal is submitted to the Owner. Subcontractors may not submit a proposal except through the Contractor.

Use of the Change Order Form entitled "Contract Modification Proposal and Acceptance"

- When the Loanee wishes to issue a change to the contract, the attached "Contract Modification Proposal and Acceptance" form should be used as a request for proposal. Upon final settlement of the change, this same form is then completed and serves as the contract modification.

- The Loanee in requesting a proposal for a change would execute items 1 through 8 (exclusive of the revised contract price and duration data) and 9 through 12. Pages 1 and 2 of this form are then forwarded to the contractor, specifying scope of work and requesting the contractor's proposal.

- The contractor should execute page 2 of the form. He then submits pages 1 and 2 of the form as his proposal, attaching additional sheets as necessary to provide his detailed breakdown of costs.

- Upon negotiation of a final settlement, the Loanee completes page 1 of the form, and all concerned parties (Contractor, Engineer, Owner) sign this document as the contract modification.

- Page 3 of the form is executed by the Loanee for documentation of the change, and to provide the necessary details for review by the Regulatory Agencies.

- Submit a minimum of one original with raised engineer's seal and one copy. It is suggested that one original be kept for your records.

Detailed Instructions for Executing "Contract Modification Proposal and Acceptance" Form

Item 1. Enter the name of the Loanee.

Item 2. Enter State Project number.

Item 3. Enter the contract number or designation.

Item 4. Enter the number identifying this modification.

Item 5. Enter the name of the Contractor.

Item 6. Enter the project title and location.

Item 7. Requests a proposal for the specified change order work, but does not direct contractor to proceed. The owner or his authorized representative must execute this statement by signature with date and title blocks entered.

Item 8. Provide a clear description of the scope of work for this change. Upon final settlement of the modification costs, enter cost data by line item for unit priced items or by sum; and state total cost of this modification – net increase, decrease or no change in contract price. Enter appropriate information for any change in contract time, including number or calendar days involved. The modification is executed when all appropriate signatures are included.

Items 9 – 12. Same as items 1 – 4.

Item 13. Executed by the contractor, stating net effect of change in appropriate box for money and time. A detailed breakdown must be provided in this item; and appropriate signature of authorized representative of contractor included.

Item 14. Enter the Loanee's name and State Project number.

Item 15. Enter the contract number or designation.

Item 16. Enter number identifying this modification.

Item 17. Enter appropriate financial data.

Item 18. Explain and justify the reasons for this change order.

Item 19. Explain all other impacts resulting from this change with estimate of costs involved. This should include impact on other contractors and the Consulting Engineers.

Item 20. Document that negotiations were held as required by the regulations and explain the events leading to the final settlement in price and time. This statement should include, at a minimum, date and location of negotiations, persons attending, summary of negotiations leading to final price and time settlements, and a statement that the agreed-to price is "fair and reasonable".

CONTRACT MODIFICATION PROPOSAL AND ACCEPTANCE

1. ISSUING OFFICE	2. PROJECT NO.	3. CONTRACT NO.	4. MODIFICATION NO.
5. TO (CONTRACTOR)		6. PROJECT LOCATION AND DESCRIPTION	

7. A proposal is required for making the hereinafter described change in accordance with specification and drawing revisions cited herein or listed in attachment hereto. Submit your proposal in space indicated on Page 2, attach detailed breakdown of prime and sub-contract costs (See the clause of this contract entitled, "Changes". DO NOT start work under this proposed change until you receive a copy signed by the Contracting Officer or a directive to proceed).

Date _____ Type Name and Title _____ Signature _____

8. DESCRIPTION OF CHANGE: *Pursuant to the clause of this contract covering changes, the contractor shall furnish all labor and material, and all work necessary to accomplish the following described work:*

As a result of the above, the contract price is revised as follows:

ITEM NO.	ITEM DESCRIPTION	UNIT PRICE	ESTIMATED QUANTITY	TOTAL COST

TOTAL COST OF THIS MODIFICATION $ _____

The contract time is hereby: *increase* ☐ *decrease* ☐ or *remains the same* ☐ by _____ calendar days as a result of this modification.

The foregoing modification is hereby accepted:

CONTRACTOR	OWNER	(NJPE SEAL) ENGINEER
BY: _____	BY: _____	BY: _____
DATE: _____	DATE: _____	DATE: _____

APPROVAL:

STATE OF NEW JERSEY _____ DATE _____

CONTRACT MODIFICATION PROPOSAL AND ACCEPTANCE

9. ISSUING OFFICE	10. PROJECT NO.	11. CONTRACT NO.	12. MODIFICATION NO.

13. CONTRACTOR'S PROPOSAL - CHANGE IN CONTRACT PRICE
(Detailed breakdown, attach additional sheets as necessary)

(Proposed)

NET INCREASE	NET DECREASE	CALENDAR DAYS INCREASE
$ _____	$ _____	_____ DAYS

DATE:	TYPE NAME AND TITLE:	SIGNATURE:

CONTRACT MODIFICATION PROPOSAL AND ACCEPTANCE

14. ISSUING OFFICE & PROJECT NO.	15. CONTRACT NO.	16. MODIFICATION NO.

17. ORIGINAL CONTRACT BID PRICE..... $ _____
TOTAL OF PREVIOUS CHANGE ORDERS..... $ _____
TOTAL CONTRACT COST INCLUDING CHANGE ORDERS..... $ _____

18. NECESSITY FOR CHANGE AND REASON FOR OMISSION FROM PLANS AND SPECIFICATIONS:

19. OTHER IMPACTS RESULTANT OF THIS CHANGE:

20. RESUME OF NEGOTIATIONS OR RECOMMENDATIONS (Loanee's Representative):

DATE:	TYPE NAME AND TITLE OF LOANEE'S REPRESENTATIVE:	SIGNATURE:

Content Last Revised: **Current as of 10/16/2017**

CFR **Code of Federal Regulations Pertaining to ESA**

Title 29 – **Labor** Chapter I

Part 5 - **Labor Standards Provisions Applicable to Contracts Covering Federally Financed and Assisted Construction**

Subpart A - **Davis-Bacon and Related Acts Provisions and Procedures**

Section Number: 5.5 Contract provisions and related matters.

(a) The Agency head shall cause or require the contracting officer to insert in full in any contract in excess of $2,000 which is entered into for the actual construction, alteration and/or repair, including painting and decorating, of a public building or public work, or building or work financed in whole or in part from Federal funds or in accordance with guarantees of a Federal agency or financed from funds obtained by pledge of any contract of a Federal agency to make a loan, grant or annual contribution (except where a different meaning is expressly indicated), and which is subject to the labor standards provisions of any of the acts listed in §5.1, the following clauses (or any modifications thereof to meet the particular needs of the agency, *Provided,* That such modifications are first approved by the Department of Labor):

(1) *Minimum wages.* (i) All laborers and mechanics employed or working upon the site of the work (or under the United States Housing Act of 1937 or under the Housing Act of 1949 in the construction or development of the project), will be paid unconditionally and not less often than once a week, and without subsequent deduction or rebate on any account (except such payroll deductions as are permitted by regulations issued by the Secretary of Labor under the Copeland Act (29 CFR part 3)), the full amount of wages and bona fide fringe benefits (or cash equivalents thereof) due at time of payment computed at rates not less than those contained in the wage determination of the Secretary of Labor which is attached hereto and made a part hereof, regardless of any contractual relationship which may be alleged to exist between the contractor and such laborers and mechanics. Contributions made or costs reasonably anticipated for bona fide fringe benefits under section 1(b)(2) of the Davis-Bacon Act on behalf of laborers or mechanics are considered wages paid to such laborers or mechanics, subject to the provisions of paragraph (a)(1)(iv) of this section; also, regular contributions made or costs incurred for more than a weekly period (but not less often than quarterly) under plans, funds, or programs which cover the particular weekly period, are deemed to be constructively made or incurred during such weekly period. Such laborers and mechanics shall be paid the appropriate wage rate and fringe benefits on the wage determination for the classification of work actually performed, without regard to skill, except as provided in §5.5(a)(4). Laborers or mechanics performing work in more than one classification may be compensated at the rate specified for each classification for the time actually worked therein: *Provided,* That the employer's payroll records accurately set forth

the time spent in each classification in which work is performed. The wage determination (including any additional classification and wage rates conformed under paragraph (a)(1)(ii) of this section) and the Davis-Bacon poster (WH-1321) shall be posted at all times by the contractor and its subcontractors at the site of the work in a prominent and accessible place where it can be easily seen by the workers.

(ii)(A) The contracting officer shall require that any class of laborers or mechanics, including helpers, which is not listed in the wage determination and which is to be employed under the contract shall be classified in conformance with the wage determination. The contracting officer shall approve an additional classification and wage rate and fringe benefits therefore only when the following criteria have been met:

(*1*) The work to be performed by the classification requested is not performed by a classification in the wage determination; and

(*2*) The classification is utilized in the area by the construction industry; and

(*3*) The proposed wage rate, including any bona fide fringe benefits, bears a reasonable relationship to the wage rates contained in the wage determination.

(B) If the contractor and the laborers and mechanics to be employed in the classification (if known), or their representatives, and the contracting officer agree on the classification and wage rate (including the amount designated for fringe benefits where appropriate), a report of the action taken shall be sent by the contracting officer to the Administrator of the Wage and Hour Division, U.S. Department of Labor, Washington, DC 20210. The Administrator, or an authorized representative, will approve, modify, or disapprove every additional classification action within 30 days of receipt and so advise the contracting officer or will notify the contracting officer within the 30-day period that additional time is necessary.

(C) In the event the contractor, the laborers or mechanics to be employed in the classification or their representatives, and the contracting officer do not agree on the proposed classification and wage rate (including the amount designated for fringe benefits, where appropriate), the contracting officer shall refer the questions, including the views of all interested parties and the recommendation of the contracting officer, to the Administrator for determination. The Administrator, or an authorized representative, will issue a determination within 30 days of receipt and so advise the contracting officer or will notify the contracting officer within the 30-day period that additional time is necessary.

(D) The wage rate (including fringe benefits where appropriate) determined pursuant to paragraphs (a)(1)(ii) (B) or (C) of this section, shall be paid to all workers performing work in the classification under this contract from the first day on which work is performed in the classification.

(iii) Whenever the minimum wage rate prescribed in the contract for a class of laborers or mechanics includes a fringe benefit which is not expressed as an hourly rate, the contractor shall

either pay the benefit as stated in the wage determination or shall pay another bona fide fringe benefit or an hourly cash equivalent thereof.

(iv) If the contractor does not make payments to a trustee or other third person, the contractor may consider as part of the wages of any laborer or mechanic the amount of any costs reasonably anticipated in providing bona fide fringe benefits under a plan or program, *Provided,* That the Secretary of Labor has found, upon the written request of the contractor, that the applicable standards of the Davis-Bacon Act have been met. The Secretary of Labor may require the contractor to set aside in a separate account assets for the meeting of obligations under the plan or program.

(2) *Withholding.* The (write in name of Federal Agency or the loan or grant recipient) shall upon its own action or upon written request of an authorized representative of the Department of Labor withhold or cause to be withheld from the contractor under this contract or any other Federal contract with the same prime contractor, or any other federally-assisted contract subject to Davis-Bacon prevailing wage requirements, which is held by the same prime contractor, so much of the accrued payments or advances as may be considered necessary to pay laborers and mechanics, including apprentices, trainees, and helpers, employed by the contractor or any subcontractor the full amount of wages required by the contract. In the event of failure to pay any laborer or mechanic, including any apprentice, trainee, or helper, employed or working on the site of the work (or under the United States Housing Act of 1937 or under the Housing Act of 1949 in the construction or development of the project), all or part of the wages required by the contract, the (Agency) may, after written notice to the contractor, sponsor, applicant, or owner, take such action as may be necessary to cause the suspension of any further payment, advance, or guarantee of funds until such violations have ceased.

(3) *Payrolls and basic records.* (i) Payrolls and basic records relating thereto shall be maintained by the contractor during the course of the work and preserved for a period of three years thereafter for all laborers and mechanics working at the site of the work (or under the United States Housing Act of 1937, or under the Housing Act of 1949, in the construction or development of the project). Such records shall contain the name, address, and social security number of each such worker, his or her correct classification, hourly rates of wages paid (including rates of contributions or costs anticipated for bona fide fringe benefits or cash equivalents thereof of the types described in section 1(b)(2)(B) of the Davis-Bacon Act), daily and weekly number of hours worked, deductions made and actual wages paid. Whenever the Secretary of Labor has found under 29 CFR 5.5(a)(1)(iv) that the wages of any laborer or mechanic include the amount of any costs reasonably anticipated in providing benefits under a plan or program described in section 1(b)(2)(B) of the Davis-Bacon Act, the contractor shall maintain records which show that the commitment to provide such benefits is enforceable, that the plan or program is financially responsible, and that the plan or program has been communicated in writing to the laborers or mechanics affected, and records which show the costs anticipated or the actual cost incurred in providing such benefits. Contractors employing apprentices or trainees under approved programs shall maintain written evidence of the registration of apprenticeship programs and certification of trainee programs, the registration of the apprentices and trainees, and the ratios and wage rates prescribed in the applicable programs.

(ii)(A) The contractor shall submit weekly for each week in which any contract work is performed a copy of all payrolls to the (write in name of appropriate federal agency) if the agency is a party to the contract, but if the agency is not such a party, the contractor will submit the payrolls to the applicant, sponsor, or owner, as the case may be, for transmission to the (write in name of agency). The payrolls submitted shall set out accurately and completely all of the information required to be maintained under 29 CFR 5.5(a)(3)(i), except that full social security numbers and home addresses shall not be included on weekly transmittals. Instead the payrolls shall only need to include an individually identifying number for each employee (*e.g.*, the last four digits of the employee's social security number). The required weekly payroll information may be submitted in any form desired. Optional Form WH-347 is available for this purpose from the Wage and Hour Division Web site at *http://www.dol.gov/esa/whd/forms/wh347instr.htm* or its successor site. The prime contractor is responsible for the submission of copies of payrolls by all subcontractors. Contractors and subcontractors shall maintain the full social security number and current address of each covered worker, and shall provide them upon request to the (write in name of appropriate federal agency) if the agency is a party to the contract, but if the agency is not such a party, the contractor will submit them to the applicant, sponsor, or owner, as the case may be, for transmission to the (write in name of agency), the contractor, or the Wage and Hour Division of the Department of Labor for purposes of an investigation or audit of compliance with prevailing wage requirements. It is not a violation of this section for a prime contractor to require a subcontractor to provide addresses and social security numbers to the prime contractor for its own records, without weekly submission to the sponsoring government agency (or the applicant, sponsor, or owner).

(B) Each payroll submitted shall be accompanied by a "Statement of Compliance," signed by the contractor or subcontractor or his or her agent who pays or supervises the payment of the persons employed under the contract and shall certify the following:

(*1*) That the payroll for the payroll period contains the information required to be provided under §5.5 (a)(3)(ii) of Regulations, 29 CFR part 5, the appropriate information is being maintained under §5.5 (a)(3)(i) of Regulations, 29 CFR part 5, and that such information is correct and complete;

(*2*) That each laborer or mechanic (including each helper, apprentice, and trainee) employed on the contract during the payroll period has been paid the full weekly wages earned, without rebate, either directly or indirectly, and that no deductions have been made either directly or indirectly from the full wages earned, other than permissible deductions as set forth in Regulations, 29 CFR part 3;

(*3*) That each laborer or mechanic has been paid not less than the applicable wage rates and fringe benefits or cash equivalents for the classification of work performed, as specified in the applicable wage determination incorporated into the contract.

(C) The weekly submission of a properly executed certification set forth on the reverse side of Optional Form WH-347 shall satisfy the requirement for submission of the "Statement of Compliance" required by paragraph (a)(3)(ii)(B) of this section.

(D) The falsification of any of the above certifications may subject the contractor or subcontractor to civil or criminal prosecution under section 1001 of title 18 and section 231 of title 31 of the United States Code.

(iii) The contractor or subcontractor shall make the records required under paragraph (a)(3)(i) of this section available for inspection, copying, or transcription by authorized representatives of the (write the name of the agency) or the Department of Labor, and shall permit such representatives to interview employees during working hours on the job. If the contractor or subcontractor fails to submit the required records or to make them available, the Federal agency may, after written notice to the contractor, sponsor, applicant, or owner, take such action as may be necessary to cause the suspension of any further payment, advance, or guarantee of funds. Furthermore, failure to submit the required records upon request or to make such records available may be grounds for debarment action pursuant to 29 CFR 5.12.

(4) *Apprentices and trainees*—(i) *Apprentices.* Apprentices will be permitted to work at less than the predetermined rate for the work they performed when they are employed pursuant to and individually registered in a bona fide apprenticeship program registered with the U.S. Department of Labor, Employment and Training Administration, Office of Apprenticeship Training, Employer and Labor Services, or with a State Apprenticeship Agency recognized by the Office, or if a person is employed in his or her first 90 days of probationary employment as an apprentice in such an apprenticeship program, who is not individually registered in the program, but who has been certified by the Office of Apprenticeship Training, Employer and Labor Services or a State Apprenticeship Agency (where appropriate) to be eligible for probationary employment as an apprentice. The allowable ratio of apprentices to journeymen on the job site in any craft classification shall not be greater than the ratio permitted to the contractor as to the entire work force under the registered program. Any worker listed on a payroll at an apprentice wage rate, who is not registered or otherwise employed as stated above, shall be paid not less than the applicable wage rate on the wage determination for the classification of work actually performed. In addition, any apprentice performing work on the job site in excess of the ratio permitted under the registered program shall be paid not less than the applicable wage rate on the wage determination for the work actually performed. Where a contractor is performing construction on a project in a locality other than that in which its program is registered, the ratios and wage rates (expressed in percentages of the journeyman's hourly rate) specified in the contractor's or subcontractor's registered program shall be observed. Every apprentice must be paid at not less than the rate specified in the registered program for the apprentice's level of progress, expressed as a percentage of the journeymen hourly rate specified in the applicable wage determination. Apprentices shall be paid fringe benefits in accordance with the provisions of the apprenticeship program. If the apprenticeship program does not specify fringe benefits, apprentices must be paid the full amount of fringe benefits listed on the wage determination for the applicable classification. If the Administrator determines that a different practice prevails for the applicable apprentice classification, fringes shall be paid in accordance with that determination. In the event the Office of Apprenticeship Training, Employer and Labor Services, or a State Apprenticeship Agency recognized by the Office, withdraws approval of an apprenticeship program, the contractor will no longer be permitted to utilize apprentices at less than the applicable predetermined rate for the work performed until an acceptable program is approved.

(ii) *Trainees.* Except as provided in 29 CFR 5.16, trainees will not be permitted to work at less than the predetermined rate for the work performed unless they are employed pursuant to and individually registered in a program which has received prior approval, evidenced by formal certification by the U.S. Department of Labor, Employment and Training Administration. The ratio of trainees to journeymen on the job site shall not be greater than permitted under the plan approved by the Employment and Training Administration. Every trainee must be paid at not less than the rate specified in the approved program for the trainee's level of progress, expressed as a percentage of the journeyman hourly rate specified in the applicable wage determination. Trainees shall be paid fringe benefits in accordance with the provisions of the trainee program. If the trainee program does not mention fringe benefits, trainees shall be paid the full amount of fringe benefits listed on the wage determination unless the Administrator of the Wage and Hour Division determines that there is an apprenticeship program associated with the corresponding journeyman wage rate on the wage determination which provides for less than full fringe benefits for apprentices. Any employee listed on the payroll at a trainee rate who is not registered and participating in a training plan approved by the Employment and Training Administration shall be paid not less than the applicable wage rate on the wage determination for the classification of work actually performed. In addition, any trainee performing work on the job site in excess of the ratio permitted under the registered program shall be paid not less than the applicable wage rate on the wage determination for the work actually performed. In the event the Employment and Training Administration withdraws approval of a training program, the contractor will no longer be permitted to utilize trainees at less than the applicable predetermined rate for the work performed until an acceptable program is approved.

(iii) *Equal employment opportunity.* The utilization of apprentices, trainees and journeymen under this part shall be in conformity with the equal employment opportunity requirements of Executive Order 11246, as amended, and 29 CFR part 30.

(5) *Compliance with Copeland Act requirements.* The contractor shall comply with the requirements of 29 CFR part 3, which are incorporated by reference in this contract.

(6) *Subcontracts.* The contractor or subcontractor shall insert in any subcontracts the clauses contained in 29 CFR 5.5(a)(1) through (10) and such other clauses as the (write in the name of the Federal agency) may by appropriate instructions require, and also a clause requiring the subcontractors to include these clauses in any lower tier subcontracts. The prime contractor shall be responsible for the compliance by any subcontractor or lower tier subcontractor with all the contract clauses in 29 CFR 5.5.

(7) *Contract termination: debarment.* A breach of the contract clauses in 29 CFR 5.5 may be grounds for termination of the contract, and for debarment as a contractor and a subcontractor as provided in 29 CFR 5.12.

(8) *Compliance with Davis-Bacon and Related Act requirements.* All rulings and interpretations of the Davis-Bacon and Related Acts contained in 29 CFR parts 1, 3, and 5 are herein incorporated by reference in this contract.

(9) *Disputes concerning labor standards.* Disputes arising out of the labor standards provisions of this contract shall not be subject to the general disputes clause of this contract. Such disputes shall be resolved in accordance with the procedures of the Department of Labor set forth in 29 CFR parts 5, 6, and 7. Disputes within the meaning of this clause include disputes between the contractor (or any of its subcontractors) and the contracting agency, the U.S. Department of Labor, or the employees or their representatives.

(10) *Certification of eligibility.* (i) By entering into this contract, the contractor certifies that neither it (nor he or she) nor any person or firm who has an interest in the contractor's firm is a person or firm ineligible to be awarded Government contracts by virtue of section 3(a) of the Davis-Bacon Act or 29 CFR 5.12(a)(1).

(ii) No part of this contract shall be subcontracted to any person or firm ineligible for award of a Government contract by virtue of section 3(a) of the Davis-Bacon Act or 29 CFR 5.12(a)(1).

(iii) The penalty for making false statements is prescribed in the U.S. Criminal Code, 18 U.S.C. 1001.

(b) *Contract Work Hours and Safety Standards Act.* The Agency Head shall cause or require the contracting officer to insert the following clauses set forth in paragraphs (b)(1), (2), (3), and (4) of this section in full in any contract in an amount in excess of $100,000 and subject to the overtime provisions of the Contract Work Hours and Safety Standards Act. These clauses shall be inserted in addition to the clauses required by §5.5(a) or §4.6 of part 4 of this title. As used in this paragraph, the terms *laborers* and *mechanics* include watchmen and guards.

(1) *Overtime requirements.* No contractor or subcontractor contracting for any part of the conract work which may require or involve the employment of laborers or mechanics shall require or permit any such laborer or mechanic in any workweek in which he or she is employed on such work to work in excess of forty hours in such workweek unless such laborer or mechanic receives compensation at a rate not less than one and one-half times the basic rate of pay for all hours worked in excess of forty hours in such workweek.

(2) *Violation; liability for unpaid wages; liquidated damages.* In the event of any violation of the clause set forth in paragraph (b)(1) of this section the contractor and any subcontractor responsible therefor shall be liable for the unpaid wages. In addition, such contractor and subcontractor shall be liable to the United States (in the case of work done under contract for the District of Columbia or a territory, to such District or to such territory), for liquidated damages. Such liquidated damages shall be computed with respect to each individual laborer or mechanic, including watchmen and guards, employed in violation of the clause set forth in paragraph (b)(1) of this section, in the sum of $25 for each calendar day on which such individual was required or permitted to work in excess of the standard workweek of forty hours without payment of the overtime wages required by the clause set forth in paragraph (b)(1) of this section.

(3) *Withholding for unpaid wages and liquidated damages.* The (write in the name of the Federal agency or the loan or grant recipient) shall upon its own action or upon written request of an authorized representative of the Department of Labor withhold or cause to be withheld, from any

moneys payable on account of work performed by the contractor or subcontractor under any such contract or any other Federal contract with the same prime contractor, or any other federally-assisted contract subject to the Contract Work Hours and Safety Standards Act, which is held by the same prime contractor, such sums as may be determined to be necessary to satisfy any liabilities of such contractor or subcontractor for unpaid wages and liquidated damages as provided in the clause set forth in paragraph (b)(2) of this section.

(4) *Subcontracts.* The contractor or subcontractor shall insert in any subcontracts the clauses set forth in paragraph (b)(1) through (4) of this section and also a clause requiring the subcontractors to include these clauses in any lower tier subcontracts. The prime contractor shall be responsible for compliance by any subcontractor or lower tier subcontractor with the clauses set forth in paragraphs (b)(1) through (4) of this section.

(c) In addition to the clauses contained in paragraph (b), in any contract subject only to the Contract Work Hours and Safety Standards Act and not to any of the other statutes cited in §5.1, the Agency Head shall cause or require the contracting officer to insert a clause requiring that the contractor or subcontractor shall maintain payrolls and basic payroll records during the course of the work and shall preserve them for a period of three years from the completion of the contract for all laborers and mechanics, including guards and watchmen, working on the contract. Such records shall contain the name and address of each such employee, social security number, correct classifications, hourly rates of wages paid, daily and weekly number of hours worked, deductions made, and actual wages paid. Further, the Agency Head shall cause or require the contracting officer to insert in any such contract a clause providing that the records to be maintained under this paragraph shall be made available by the contractor or subcontractor for inspection, copying, or transcription by authorized representatives of the (write the name of agency) and the Department of Labor, and the contractor or subcontractor will permit such representatives to interview employees during working hours on the job.

(The information collection, recordkeeping, and reporting requirements contained in the following paragraphs of this section were approved by the Office of Management and Budget:

Paragraph	**OMB Control No.**
(a)(1)(ii)(B)	1235-0023
(a)(1)(ii)(C)	1235-0023
(a)(1)(iv)	1235-0023
(a)(3)(i)	1235-0023
(a)(3)(ii)(A)	1235-0023

	1235-0008
(c)	1235-0023

[48 FR 19540, Apr. 29, 1983, as amended at 51 FR 12265, Apr. 9, 1986; 55 FR 50150, Dec. 4, 1990; 57 FR 28776, June 26, 1992; 58 FR 58955, Nov. 5, 1993; 61 FR 40716, Aug. 5, 1996; 65 FR 69693, Nov. 20, 2000; 73 FR 77511, Dec. 19, 2008; 81 FR 43450, July 1, 2016; 82 FR 2225, 2226, Jan. 9, 2017]

Procedures for Implementing Certain Provisions of EPA's Fiscal Year 2011 Full-Year Continuing Appropriation Affecting the Clean Water and Drinking Water State Revolving Fund Programs.

I. PURPOSE

The Fiscal Year (FY) 2011 Full-Year Continuing Appropriations Act (P.L. 112-10) carries forward requirements from the FY 2010 Appropriations Act (P.L. 111-88) affecting both the Clean Water and the Drinking Water State Revolving Fund (SRF) programs for FY 2011. These procedures address the implementation of the requirements and set forth administration priorities.

C. Davis-Bacon Requirements

The Davis-Bacon provision carried forward to FY 2011 from the FY 2010 Appropriation Bill states that: "For fiscal year 2010 the requirements of section 513 of the Federal Water Pollution Control Act (33 U.S.C. 1372) shall apply to the construction of treatment works carried out in whole or in part with assistance made available by a State water pollution control revolving fund as authorized by title VI of that Act (33 U.S.C. 1381 et seq.), or with assistance made available under section 205(m) of that Act (33 U.S.C. 1285(m)), or both."

"For fiscal year 2010 the requirements of section 1450(e) of the Safe Drinking Water Act (42 U.S.C. 300j-9(e)) shall apply to any construction project carried out in whole or in part with assistance made available by a drinking water treatment revolving loan fund as authorized by section 1452 of that Act (42 U.S.C. 300j-12)."

Regarding the assistance agreements affected by this provision, the procedures are found in EPA memoranda of November 30, 2009 and May X, 2011, subject: "Application of Davis-Bacon Wage Act Requirements to Fiscal Year 2010 CWSRF and DWSRF Assistance Agreements" and "Application of Davis-Bacon Wage Act Requirements to Fiscal Year 2011 CWSRF and DWSRF Assistance Agreements" (**Attachment 5**).

EPA is also adding the attached terms and conditions regarding wage rate requirements to all CWSRF and DWSRF FY 2011 capitalization grants. Additional information on compliance with the Davis-Bacon requirements is included in Attachment 6. In FY 2011, EPA will provide, as needed, additional technical assistance.

Attachment 2

Wage Rate Requirements under The Consolidated and Further Continuing Appropriations Act, 2013 (P.I. 113-6)

Preamble

With respect to the Clean Water and Safe Drinking Water State Revolving Funds, EPA provides capitalization grants to each State which in turn provides subgrants or loans to eligible entities within the State.

Typically, the subrecipients are municipal or other local governmental entities that manage the funds. For these types of recipients, the provisions set forth under **Roman Numeral I**, below, shall apply. Although EPA and the State remain responsible for ensuring subrecipients' compliance with the wage rate requirements set forth herein, those subrecipients shall have the primary responsibility to maintain payroll records as described in **Section 3(ii)(A)**, below and for compliance as described in **Section 1-5**.

Occasionally, the subrecipient may be a private for profit or not for profit entity. For these types of recipients, the provisions set forth in **Roman Numeral II**, below, shall apply. Although EPA and the State remain responsible for ensuring subrecipients' compliance with the wage rate requirements set forth herein, those subrecipients shall have the primary responsibility to maintain payroll records as described in **Section II-3(ii)(A)**, below and for compliance as described in **Section 11-5**.

I. Requirements Under The Consolidated and Further Continuing Appropriations Act, 2013 (P.I.113-6) For Subrecipients That Are Governmental Entities:

The following terms .and conditions specify how recipients will assist EPA in meeting its Davis-Bacon (DB) responsibilities when DB applies to EPA awards of financial assistance under the FY 2013 Continuing Resolution with respect to State recipients and subrecipients that are governmental entities. If a subrecipient has questions regarding when DB applies, obtaining the correct DB wage determinations, DB provisions, or compliance monitoring, it may contact the State recipient. If a State recipient needs guidance, the recipient may contact Lorraine Fleury at fleury.lorraine@epa.gov or at 215-814-2341 of EPA, Region III Grants and Audit Management Branch for guidance. The recipient or subrecipient may also obtain additional guidance from DOL's web site at http://www.dol.gov/whd/

1. Applicability of the Davis- Bacon (DB) prevailing wage requirements.

Under the FY 2013 Continuing Resolution, DB prevailing wage requirements apply to the construction, alteration, and repair of treatment works carried out in whole or in part with assistance made available by a State water pollution control revolving fund and to any construction project carried out in whole or in part by assistance made available by a drinking water treatment revolving loan fund. If a subrecipient encounters a unique situation at a site that presents uncertainties regarding DB applicability, the subrecipient must discuss the situation with the recipient State before authorizing work on that site.

2. Obtaining Wage Determinations.

(a) Subrecipients shall obtain the wage determination for the locality in which a covered activity subject to DB will take place prior to issuing requests for bids, proposals, quotes or other methods for soliciting contracts (solicitation) for activities subject to DB. These wage determinations shall be incorporated into solicitations and any subsequent contracts. Prime contracts must contain a provision requiring that subcontractors follow the wage determination incorporated into the prime contract.

(i) While the solicitation remains open, the subrecipient shall monitor www.wdol.gov weekly to

ensure that the wage determination contained in the solicitation remains current. The subrecipients shall amend the solicitation if DOL issues a modification more than 10 days prior to the closing date (i.e. bid opening) for the solicitation. If DOL modifies or supersedes the applicable wage determination less than 10 days prior to the closing date, the subrecipients may request a finding from the State recipient that there is not a reasonable time to notify interested contractors of the modification of the wage determination. The State recipient will provide a report of its findings to the subrecipient.

(ii) If the subrecipient does not award the contract within 90 days of the closure of the solicitation, any modifications or supersedes DOL makes to the wage determination contained in the solicitation shall be effective unless the State recipient, at the request of the subrecipient, obtains an extension of the 90 day period from DOL pursuant to 29 CFR 1.6(c)(3)(iv). The subrecipient shall monitor www.wdol.gov on a weekly basis if it does not award the contract within 90 days of closure of the solicitation to ensure that wage determinations contained in the solicitation remain current.

(b) If the subrecipient carries out activity subject to DB by issuing a task order, work assignment or similar instrument to an existing contractor (ordering instrument) rather than by publishing a solicitation, the subrecipient shall insert the appropriate DOL wage determination from www.wdol.gov into the ordering instrument.

(c) Subrecipients shall review all subcontracts subject to DB entered into by prime contractors to verify that the prime contractor has required its subcontractors to include the applicable wage determinations.

(d) As provided in 29 CFR 1.6(f), DOL may issue a revised wage determination applicable to a subrecipient's contract after the award of a contract or the issuance of an ordering instrument if DOL determines that the subrecipient has failed to incorporate a wage determination or has used a wage determination that clearly does not apply to the contract or ordering instrument. If this occurs, the subrecipient shall either terminate the contract or ordering instrument and issue a revised solicitation or ordering instrument or incorporate DOL's wage determination retroactive to the beginning of the contract or ordering instrument by change order. The subrecipient's contractor must be compensated for any increases in wages resulting from the use of DOL's revised wage determination.

3. Contract and Subcontract provisions.

(a) The Recipient shall insure that the subrecipient(s) shall insert in full in any contract in excess of $2,000 which is entered into for the actual construction, alteration and/or repair, including painting and decorating, of a treatment work under the CWSRF or a construction project under the DWSRF financed in whole or in part from Federal funds or in accordance with guarantees of a Federal agency or financed from funds obtained by pledge of any contract of a Federal agency to make a loan, grant or annual contribution (except where a different meaning is expressly indicated), and which is subject to the labor standards provisions of any of the acts listed in§ 5.1 or the FY 2013 Continuing Resolution, the following clauses:

(1) Minimum wages.

(i) All laborers and mechanics employed or working upon the site of the work will be paid unconditionally and not less often than once a week, and without subsequent deduction or rebate on any account (except such payroll deductions as are permitted by regulations issued by the Secretary of Labor under the Copeland Act {29 CFR part 3)), the full amount of wages and bona fide fringe benefits (or cash equivalents thereof) due at time of payment computed at rates not less than those contained in the wage determination of the Secretary of Labor which is attached hereto and made a part hereof, regardless of any contractual relationship which may be alleged to exist between the contractor and such laborers and mechanics.

Contributions made or costs reasonably anticipated for bona fide fringe benefits under section 1(b)(2) of the Davis-Bacon Act on behalf of laborers or mechanics are considered wages paid to such laborers or mechanics, subject to the provisions of paragraph (a)(1)(iv) of this section; also, regular contributions made or costs incurred for more than a weekly period (but not less often than quarterly) under plans, funds, or programs which cover the particular weekly period, are deemed to be constructively made or incurred during such weekly period. Such laborers and mechanics shall be paid the appropriate wage rate and fringe benefits on the wage determination for the classification of work actually performed, without regard to skill, except as provided in§ 5.5(a)(4). Laborers or mechanics performing work in more than one classification may be compensated at the rate specified for each classification for the time actually worked therein: Provided that the employer's payroll records accurately set forth the time spent in each classification in which work is performed. The wage determination (including any additional classification and wage rates conformed under paragraph (a)(1)(ii) of this section) and the Davis-Bacon poster (WH-1321) shall be posted at all times by the contractor and its subcontractors at the site of the work in a prominent and accessible place where it can be easily seen by the workers.

Subrecipients may obtain wage determinations from the U.S. Department of Labor's web site, www.dol.gov.

(ii)(A) The subrecipient(s), on behalf of EPA, shall require that any class of laborers or mechanics, including helpers, which is not listed in the wage determination and which is to be employed under the contract shall be classified in conformance with the wage determination.

The State award official shall approve a request for an additional classification and wage rate and fringe benefits therefore only when the following criteria have been met:

(1) The work to be performed by the classification requested is not performed by a classification in the wage determination; and

(2) The classification is utilized in the area by the construction industry; and

(3) The proposed wage rate, including any bona fide fringe benefits, bears a reasonable relationship to the wage rates contained in the wage determination.

(B) If the contractor and the laborers and mechanics to be employed in the classification (if known), or their representatives, and the subrecipient(s) agree on the classification and wage rate (including the amount designated for fringe benefits where appropriate), documentation of the action taken and the request, including the local wage determination shall be sent by the subrecipient (s) to the State award official. The State award official will transmit the request, to the Administrator of the Wage and Hour Division, Employment Standards Administration, U.S. Department of labor, Washington, DC 20210 and to the EPA DB Regional Coordinator concurrently. The Administrator, or an authorized representative, will approve, modify, or disapprove every additional classification request within 30 days of receipt and so advise the State award official or will notify the State award official within the 30-day period that additional time is necessary.

(C) In the event the contractor, the laborers or mechanics to be employed in the classification or their representatives, and the subrecipient(s) do not agree on the proposed classification and wage rate (including the amount designated for fringe benefits, where appropriate), the award official shall refer the request and the local wage determination, including the views of all interested parties and the recommendation of the State award official, to the Administrator for determination. The request shall be sent to the EPA DB Regional Coordinator concurrently. The Administrator, or an authorized representative, will issue a determination within 30 days of receipt of the request and so advice the contracting officer or will notify the contracting officer within the 30-day period that additional time is necessary.

(D) The wage rate (including fringe benefits where appropriate) determined pursuant to paragraphs (a)(l)(ii)(B) or (C) of this section, shall be paid to all workers performing work in the classification under this contract from the first day on which work is performed in the classification.

(iii) Whenever the minimum wage rate prescribed in the contract for a class of laborers or mechanics includes a fringe benefit which is not expressed as an hourly rate, the contractor shall either pay the benefit as stated in the wage determination or shall pay another bona fide fringe benefit or an hourly cash equivalent thereof.

(iv) If the contractor does not make payments to a trustee or other third person, the contractor may consider as part of the wages of any laborer or mechanic the amount of any costs reasonably anticipated in providing bona fide fringe benefits under a plan or program, Provided, That the

Secretary of Labor has found, upon the written request of the contractor, that the applicable standards of the Davis-Bacon Act have been met. The Secretary of Labor may require the contractor to set aside in a separate account assets for the meeting of obligations under the plan or program.

(2) Withholding.

The subrecipient(s), shall upon written request of the EPA Award Official or an authorized representative of the Department of labor, withhold or cause to be withheld from the contractor under this contract or any other Federal contract with the same prime contractor, or any other federally-assisted contract subject to Davis-Bacon prevailing wage requirements, which is held by the same prime contractor, so much of the accrued payments or advances as may be considered necessary to pay laborers and mechanics, including apprentices, trainees, and helpers, employed by the contractor or any subcontractor the full amount of wages required by the contract. In the event of failure to pay any laborer or mechanic, including any apprentice, trainee, or helper, employed or working on the site of the work, all or part of the wages required by the contract, the (Agency) may, after written notice to the contractor, sponsor, applicant, or owner, take such action as may be necessary to cause the suspension of any further payment, advance, or guarantee of funds until such violations have ceased.

(3) Payrolls and basic records.

(i) Payrolls and basic records relating thereto shall be maintained by the contractor during the course of the work and preserved for a period of three years thereafter for all laborers and mechanics working at the site of the work. Such records shall contain the name, address, and social security number of each such worker, his or her correct classification, hourly rates of wages paid (including rates of contributions or costs anticipated for bona fide fringe benefits or cash equivalents thereof of the types described in section l(b)(2)(B) of the Davis-Bacon Act), daily and weekly number of hours worked, deductions made and actual wages paid. Whenever the Secretary of Labor has found under 29 CFR 5.5(a)(l)(iv) that the wages of any laborer or mechanic include the amount of any costs reasonably anticipated in providing benefits under a plan or program described in section l(b)(2)(B) of the Davis-Bacon Act, the contractor shall maintain records which show that the commitment to provide such benefits is enforceable, that the plan or program is financially responsible, and that the plan or program has been communicated in writing to the laborers or mechanics affected, and records which show the costs anticipated or the actual cost incurred in providing such benefits. Contractors employing apprentices or trainees under approved programs shall maintain written evidence of the registration of apprenticeship programs and certification of trainee programs, the registration of the apprentices and trainees, and the ratios and wage rates prescribed in the applicable programs.

(ii)(A) The contractor shall submit weekly, for each week in which any contract work is performed, a copy of all payrolls to the subrecipient, that is, the entity that receives the sub-grant or loan from the State capitalization grant recipient. Such documentation shall be available on request of the State recipient or EPA. As to each payroll copy received, the subrecipient shall provide written confirmation in a form satisfactory to the State indicating whether or not the

project is in compliance with the requirements of 29 CFR 5.5(a)(I) based on the most recent payroll copies for the specified week. The payrolls shall set out accurately and completely all of the information required to be maintained under 29 CFR 5.5(a)(3)(i), except that full social security numbers and home addresses shall not be included on the weekly payrolls. Instead the payrolls shall only need to include an individually identifying number for each employee (e.g., the last four digits of the employee's social security number). The required weekly payroll information may be submitted in any form desired. Optional Form WH-347 is available for this purpose from the Wage and Hour Division Web site at http://www.dol.gov/whd/forms/wh347instr.htm or its successor site. The prime contractor is responsible for the submission of copies of payrolls by all subcontractors. Contractors and subcontractors shall maintain the full social security number and current address of each covered worker, and shall provide them upon request to the subrecipient(s) for transmission to the State or EPA if requested by EPA, the State, the contractor, or the Wage and Hour Division of the Department of Labor for purposes of an investigation or audit of compliance with prevailing wage requirements. It is not a violation of this section for a prime contractor to require a subcontractor to provide addresses and social security numbers to the prime contractor for its own records, without weekly submission to the subrecipient(s).

(B) Each payroll submitted shall be accompanied by a "Statement of Compliance," signed by the contractor or subcontractor or his or her agent who pays or supervises the payment of the persons employed under the contract and shall certify the following:

(1) That the payroll for the payroll period contains the information required to be provided under§ 5.5 (a)(3)(ii) of Regulations, 29 CFR part 5, the appropriate information is being maintained under§ 5.5 (a)(3)(i) of Regulations, 29 CFR part 5, and that such information is correct and complete;

(2) That each laborer or mechanic (including each helper, apprentice, and trainee) employed on the contract during the payroll period has been paid the full weekly wages earned, without rebate, either directly or indirectly, and that no deductions have been made either directly or indirectly from the full wages earned, other than permissible deductions as set forth in Regulations, 29 CFR part 3;

(3) That each laborer or mechanic has been paid not less than the applicable wage rates and fringe benefits or cash equivalents for the classification of work performed, as specified in the applicable wage determination incorporated into the contract.

(C) The weekly submission of a properly executed certification set forth on the reverse side of Optional Form WH-347 shall satisfy the requirement for submission of the "Statement of Compliance" required by paragraph (a)(3)(ii)(B) of this section.

(D) The falsification of any of the above certifications may subject the contractor or subcontractor to civil or criminal prosecution under section 1001 of title 18 and section 231 of title 31 of the United States Code.

(iii) The contractor or subcontractor shall make the records required under paragraph (a)(3)(i) of this section available for inspection, copying, or transcription by authorized representatives of the State, EPA or the Department of Labor, and shall permit such representatives to interview employees during working hours on the job. If the contractor or subcontractor fails to submit the required records or to make them available, the Federal agency or State may, after written notice to the contractor, sponsor, applicant, or owner, take such action as may be necessary to cause the suspension of any further payment, advance, or guarantee of funds. Furthermore, failure to submit the required records upon request or to make such records available may be grounds for debarment action pursuant to 29 CFR 5.12.

(4) Apprentices and trainees.

(i) Apprentices. Apprentices will be permitted to work at less than the predetermined rate for the work they performed when they are employed pursuant to and individually registered in a bona fide apprenticeship program registered with the U.S. Department of Labor, Employment and Training Administration, Office of Apprenticeship Training, Employer and Labor Services, or with a State Apprenticeship Agency recognized by the Office, or if a person is employed in his or her first 90 days of probationary employment as an apprentice in such an apprenticeship program, who is not individually registered in the program, but who has been certified by the Office of Apprenticeship Training, Employer and Labor Services or a State Apprenticeship Agency (where appropriate) to be eligible for probationary employment as an apprentice. The allowable ratio of apprentices to journeymen on the job site in any craft classification shall not be greater than the ratio permitted to the contractor as to the entire work force under the registered program. Any worker listed on a payroll at an apprentice wage rate, who is not registered or otherwise employed as stated above, shall be paid not less than the applicable wage rate on the wage determination for the classification of work actually performed. In addition, any apprentice performing work on the job site in excess of the ratio permitted under the registered program shall be paid not less than the applicable wage rate on the wage determination for the work actually performed. Where a contractor is performing construction on a project in a locality other than that in which its program is registered, the ratios and wage rates (expressed in percentages of the journeyman's hourly rate) specified in the contractor's or subcontractor's registered program shall be observed. Every apprentice must be paid at not less than the rate specified in the registered program for the apprentice's level of progress, expressed as a percentage of the journeymen hourly rate specified in the applicable wage determination. Apprentices shall be paid fringe benefits in accordance with the provisions of the apprenticeship program. If the apprenticeship program does not specify fringe benefits, apprentices must be paid the full amount of fringe benefits listed on the wage determination for the applicable classification. If the Administrator determines that a different practice prevails for the applicable apprentice classification, fringes shall be paid in accordance with that determination. In the event the Office of Apprenticeship Training, Employer and labor Services, or a State Apprenticeship Agency recognized by the Office, withdraws approval of an apprenticeship program, the contractor will no longer be permitted to utilize apprentices at less than the applicable predetermined rate for the work performed until an acceptable program is approved.

(ii) Trainees. Except as provided in 29 CFR 5.16, trainees will not be permitted to work at less than the predetermined rate for the work performed unless they are employed pursuant to and individually registered in a program which has received prior approval, evidenced by formal certification by the U.S. Department of labor, Employment and Training Administration. The ratio of trainees to journeymen on the job site shall not be greater than permitted under the plan approved by the Employment and Training Administration. Every trainee must be paid at not less than the rate specified in the approved program for the trainee's level of progress, expressed as a percentage of the journeyman hourly rate specified in the applicable wage determination. Trainees shall be paid fringe benefits in accordance with the provisions of the trainee program. If the trainee program does not mention fringe benefits, trainees shall be paid the full amount of fringe benefits listed on the wage determination unless the Administrator of the Wage and Hour Division determines that there is an apprenticeship program associated with the corresponding journeyman wage rate on the wage determination which provides for less than full fringe benefits for apprentices. Any employee listed on the payroll at a trainee rate who is not registered and participating in a training plan approved by the Employment and Training Administration shall be paid not less than the applicable wage rate on the wage determination for the classification of work actually performed. In addition, any trainee performing work on the job site in excess of the ratio permitted under the registered program shall be paid not less than the applicable wage rate on the wage determination for the work actually performed. In the event the Employment and Training Administration withdraws approval of a training program, the contractor will no longer be permitted to utilize trainees at less than the applicable predetermined rate for the work performed until an acceptable program is approved.

(iii) Equal employment opportunity. The utilization of apprentices, trainees and journeymen under this part shall be in conformity with the equal employment opportunity requirements of Executive Order 11246, as amended and 29 CFR part 30.

(5) Compliance with Copeland Act requirements.

The contractor shall comply with the requirements of 29 CFR part 3, which are incorporated by reference in this contract.

(6) Subcontracts.

The contractor or subcontractor shall insert in any subcontracts the clauses contained in 29 CFR 5.S(a)(1) through (10) and such other clauses as the EPA determines may by appropriate, and also a clause requiring the subcontractors to include these clauses in any lower tier subcontracts. The prime contractor shall be responsible for the compliance by any subcontractor or lower tier subcontractor with all the contract clauses in 29 CFR 5.5.

(7) Contract termination; debarment.

A breach of the contract clauses in 29 CFR 5.5 may be grounds for termination of the contract, and for debarment as a contractor and a subcontractor as provided in 29 CFR 5.12.

(8) Compliance with Davis-Bacon and Related Act requirements.

All rulings and interpretations of the Davis-Bacon and Related Acts contained in 29 CFR parts 1, 3, and 5 are herein incorporated by reference in this contract.

(9) Disputes concerning labor standards.

Disputes arising out of the labor standards provisions of this contract shall not be subject to the general disputes clause of this contract. Such disputes shall be resolved in accordance with the procedures of the Department of Labor set forth in 29 CFR parts 5, 6, and 7. Disputes within the meaning of this clause include disputes between the contractor (or any of its subcontractors) and Subrecipient(s), State, EPA, the U.S. Department of Labor, or the employees or their representatives.

(10) Certification of eligibility.

(i) By entering into this contract, the contractor certifies that neither it (nor he or she) nor any person or firm who has an interest in the contractor's firm is a person or firm ineligible to be awarded Government contracts by virtue of section 3(a) of the Davis-Bacon Act or 29 CFR 5.12(a)(1).

(ii) No part of this contract shall be subcontracted to any person or firm ineligible for award of a Government contract by virtue of section 3(a) of the Davis-Bacon Act or 29 CFR 5.12(a)(1).

(iii) The penalty for making false statements is prescribed in the U.S. Criminal Code, 18 U.S.C. 1001.

4. Contract Provision for Contracts in Excess of $100,000.

(a) Contract Work Hours and Safety Standards Act. The subrecipient shall insert the following clauses set forth in paragraphs (a)(1), (2), (3), and (4) of this section in full in any contract in an amount in excess of $100,000 and subject to the overtime provisions of the Contract Work Hours and Safety Standards Act. These clauses shall be inserted in addition to the clauses required by Item 3, above or 29 CFR 4.6. As used in this paragraph, the terms laborers and mechanics include watchmen and guards.

(1) Overtime requirements. No contractor or subcontractor contracting for any part of the contract work which may require or involve the employment of laborers or mechanics shall require or permit any such laborer or mechanic in any workweek in which he or she is employed on such work to work in excess of forty hours in such workweek unless such laborer or mechanic receives compensation at a rate not less than one and one-half times the basic rate of pay for all hours worked in excess of forty hours in such workweek.

(2) Violation; liability for unpaid wages; liquidated damages. In the event of any violation of the clause set forth in paragraph (a)(1) of this section the contractor and any subcontractor responsible therefore shall be liable for the unpaid wages. In addition, such contractor and subcontractor shall be liable to the United States (in the case of work done under contract for the District of Columbia or a territory, to such District or to such territory), for liquidated

damages. Such liquidated damages shall be computed with respect to each individual laborer or mechanic, including watchmen and guards, employed in violation of the clause set forth in paragraph (a)(1) of this section, in the sum of $10 for each calendar day on which such individual was required or permitted to work in excess of the standard workweek of forty hours without payment of the overtime wages required by the clause set forth in paragraph (a)(1) of this section.

(3) Withholding for unpaid wages and liquidated damages. The subrecipient, upon written request of the EPA Award Official or an authorized representative of the Department of labor, shall withhold or cause to be withheld, from any moneys payable on account of work performed by the contractor or subcontractor under any such contract or any other Federal contract with the same prime contractor, or any other federally-assisted contract subject to the Contract Work Hours and Safety Standards Act, which is held by the :same prime contractor, such sums as may be determined to be necessary to satisfy any liabilities of such contractor or subcontractor for unpaid wages and liquidated damages as provided in the clause set forth in paragraph (b)(2) of this section.

(4) Subcontracts. The contractor or subcontractor shall insert in any subcontracts the clauses set forth in paragraph (a)(I) through (4) of this section and also a clause requiring the subcontractors to include these clauses in any lower tier subcontracts. The prime contractor shall be responsible for compliance by any subcontractor or lower tier subcontractor with the clauses set forth in paragraphs (a)(1) through (4) of this section.

(b) In addition to the clauses contained in Item *3,* above, in any contract subject only to the Contract Work Hours and Safety Standards Act and not to any of the other statutes cited in

29 CFR 5.1, the Subrecipient shall insert a clause requiring that the contractor or subcontractor shall maintain payrolls and basic payroll records during the course of the work and shall preserve them for a period of three years from the completion of the contract for all laborers and mechanics, including guards and watchmen, working on the contract. Such records shall contain the name and address of each such employee, social security number, correct classifications, hourly rates of wages paid, daily and weekly number of hours worked, deductions *made,* and actual wages paid. Further, the Subrecipient shall insert in any such contract a clause providing hat the records to be maintained under this paragraph shall be made available by the contractor or subcontractor for inspection, copying, or transcription by authorized representatives of the (write the name of agency) and the Department of labor, and the contractor or subcontractor will permit such representatives to interview employees during working hours on the job.

5. Compliance Verification.

(a) The subrecipient shall periodically interview a sufficient number of employees entitled to DB prevailing wages (covered employees) to verify that contractors or subcontractors are paying the appropriate wage rates. As provided in 29 CFR 5.6(a)(6), all interviews must be conducted in confidence. The subrecipient must use Standard Form 1445 {SF 1445) or equivalent

documentation to memorialize the interviews. Copies of the SF 1445 are available from EPA on request.

(b) The subrecipient shall establish and follow an interview schedule based on its assessment of the risks of noncompliance with DB posed by contractors or subcontractors and the duration of the contract or subcontract. Subrecipients must conduct more frequent interviews if the initial interviews or other information indicated that there is a risk that the contractor or subcontractor is not complying with DB. Subrecipients shall immediately conduct interviews in response to an alleged violation of the prevailing wage requirements. All interviews shall be conducted in confidence.

(c) The subrecipient shall periodically conduct spot checks of a representative sample of weekly payroll data to verify that contractors or subcontractors are paying the appropriate wage rates. The subrecipient shall establish and follow a spot check schedule based on its assessment of the risks of noncompliance with DB posed by contractors or subcontractors and the duration of the contract or subcontract. At a minimum, if practicable, the subrecipient should spot check payroll data within two weeks of each contractor or subcontractor's submission of its initial payroll data and two weeks prior to the completion date the contract or subcontract. Subrecipients must conduct more frequent spot checks if the initial spot check or other information indicates that there is a risk that the contractor or subcontractor is not complying with DB. In addition, during the examinations the subrecipient shall verify evidence of fringe benefit plans and payments there under by contractors and subcontractors who claim cred it for fringe benefit contributions.

(d) The subrecipient shall periodically review contractors and subcontractors use of apprentices and trainees to verify registration and certification with respect to apprenticeship and training programs approved by either the U.S Department of Labor or a state, as appropriate, and that contractors and subcontractors are not using disproportionate numbers of, laborers, trainees and apprentices. These reviews shall be conducted in accordance with the schedules for spot checks and interviews described in Item S(b) and (c) above.

(e) Subrecipients must immediately report potential violations of the DB prevailing wage requirements to the EPA DB contact listed above and to the appropriate DOL Wage and Hour District Office listed at http:ljwww.dol.gov/contacts/whd/america2.htm.

EXECUTIVE ORDER No. 11246

September 28, 1965, 30 F.R. 12319

EQUAL EMPLOYMENT OPPORTUNITY

Under and by virtue of the authority vested in me as President of the United States by the Constitution and statutes of the United States, it is ordered as follows:

PART I----NONDISCRIMINATION IN GOVERNMENT EMPLOYMENT

Section 101. It is the policy of the Government of the United States to provide equal opportunity in Federal employment for all qualified persons, to prohibit discrimination in employment because of race, creed, color, or national origin, and to promote the full realization of equal employment opportunity through a positive, continuing program in each executive department and agency. The policy of equal opportunity applies to every aspect of Federal employment policy and practice.

Sec. 102. The head of each executive department and agency shall establish and maintain a positive program of equal employment opportunity for all civilian employees and applicants for employment within his jurisdiction in accordance with the policy set forth in Section 101.

Sec. 103. The Civil Service Commission shall supervise and provide leadership and guidance in the conduct of equal employment opportunity programs for the civilian employees of and applications for employment within the executive departments and agencies and shall review agency program accomplishments periodically. In order to facilitate the achievement of a model program for equal employment opportunity in the Federal service, the Commission may consult from time to time with such individuals, groups, or organizations as may be of assistance in improving the Federal program and realizing the objectives of this Part.

Sec. 104. The Civil Service Commission shall provide for the prompt, fair, and impartial consideration of all complaints of discrimination in Federal employment on the basis of race, creed, color, or national origin. Procedures for the consideration of complaints shall include at least one impartial review within the executive department or agency and shall provide for appeal to the Civil Service Commission.

Sec. 105. The Civil Service Commission shall issue such regulations, orders, and instructions as it deems necessary and appropriate to carry out its responsibilities under this Part, and the head of each executive department and agency shall comply with the regulations, orders, and instructions issued by the Commission under this Part.

PART II ---- NONDISCRIMINATION IN EMPLOYMENT BY GOVERNMENT CONTRACTORS AND SUBCONTRACTORS

SUBPART A DUTIES OF THE SECRETARY OF LABOR

Sec. 201. The Secretary of Labor shall be responsible for the administration of Parts II and III of this Order and shall adopt such rules and regulations and issue such orders as he deems necessary and appropriate to achieve the purposes thereof.

SUBPART B CONTRACTORS' AGREEMENTS

Sec. 202. Except in contracts exempted in accordance with Section 204 of this Order, all Government contracting agencies shall include in every Government contract hereafter entered into the following provisions:

> *"During the performance of this contract, the contractor agrees as follows:*
>
> *"(1) The contractor will not discriminate against any employee or applicant for employment because of race, creed, color, or national origin. The contractor will take affirmative action to ensure that applicants are employed, and that employees are treated during employment, without regard to their race, creed, color, or national origin. Such action shall include, but not be limited to the following: employment, upgrading, demotion, or transfer; recruitment or recruitment advertising; layoff or termination; rates of pay or other forms of compensation; and selection for training, including apprenticeship. The contractor agrees to post in conspicuous places, available to employees and applicants for employment, notices to be provided by the contracting officer setting forth the provisions of this nondiscrimination clause.*
>
> *"(2) The contractor will, in all solicitations or advertisements for employees placed by or on behalf of the contractor, state that all qualified applicants will receive consideration for employment without regard to race, creed, color, or national origin.*
>
> *"(3) The contractor will send to each labor union or representative of workers with which he has a collective bargaining agreement or other contract or understanding, a notice, to be provided by the agency contracting officer, advising the labor union or workers' representative of the contractor's commitments under Section 202 of Executive Order No. 11246 of September 24, 1965, and shall post copies of the notice in conspicuous places available to employees and applicants for employment.*
>
> *"(4) The contractor will comply with all provisions of Executive Order No. 11246 of Sept. 24, 1965, and of the rules, regulations, and relevant orders of the Secretary of Labor.*
>
> *"(5) The contractor will furnish all information and reports required by Executive Order No. 11246 of September 24, 1965, and by the rules, regulations, and orders of the secretary of Labor, or pursuant thereto, and will permit access to his books, records, and accounts by the contracting agency and the Secretary of Labor for purposes of investigation to ascertain compliance with such rules, regulations, and orders.*
>
> *"(6) In the event of the contractor's noncompliance with the nondiscrimination clauses of this contract or with any of such rules, regulations, or orders, this contract may be cancelled, terminated or suspended in whole or in part and the contractor may be declared ineligible for further Government contracts in accordance with procedures authorized in Executive Order No. 11246 of Sept 24, 1965, and such other sanctions may be imposed and remedies invoked as provided in Executive Order No. 11246 of September 24, 1965, or by rule, regulation, or order of the Secretary of Labor, or as otherwise provided by law.*

"(7) The contractor will include the provisions of Paragraphs (1) through (7) in every subcontract or purchase order unless exempted by rules, regulations, or orders of the Secretary of Labor issued pursuant to Section 204 of Executive Order No. 11246 of Sept. 24, 1965, so that such provisions will be binding upon each subcontractor or vendor. The contractor will take such action with respect to any subcontract or purchase order as the contracting agency may direct as a means of enforcing such provisions including sanctions for noncompliance: Provided, however, That in the event the contractor becomes involved in, or is threatened with, litigation with a subcontractor or vendor as a result of such direction by the contracting agency, the contractor may request the United States to enter into such litigation to protect the interests of the United States."

Sec. 203. (a) Each contractor having a contract containing the provisions prescribed in Section 202 shall file, and shall cause each of his subcontractors to file, Compliance Reports with the contracting agency or the Secretary of Labor as may be directed. Compliance Reports shall be filed within such times and shall contain such information as to the practices, policies, programs, and employment policies, programs, and employment statistics of the contractor and each subcontractor, and shall be in such form, as the Secretary of Labor may prescribe.

(b) Bidders or prospective contractors or subcontractors may be required to state whether they have participated in any previous contract subject to the provisions of this Order, or any preceding similar Executive order, and in that event to submit, on behalf of themselves and their proposed subcontractors, Compliance Reports prior to or as an initial part of their bid or negotiation of a contract.

(c) Whenever the contractor or subcontractor has a collective bargaining agreement or other contract or understanding with a labor union or an agency referring workers or providing or supervising apprenticeship or training for such workers, the Compliance Report shall include such information as to such labor union's or agency's practices and policies affecting compliance as the Secretary of Labor may prescribe: Provided, That to the extent such information is within the exclusive possession of a labor union or an agency referring workers or providing or supervising apprenticeship or training and such labor union or agency shall refuse to furnish such information to the contractor, the contractor shall so certify to the contracting agency as part of its Compliance Report and shall set forth what efforts he has made to obtain such information.

(d) The contracting agency or the Secretary of Labor may direct that any bidder or prospective contractor or subcontractor shall submit, as part of his Compliance Report, a statement in writing, signed by an authorized officer or agent on behalf of any labor union or any agency referring workers or providing or supervising apprenticeship or other training, with which the bidder or prospective contractor deals, with supporting information, to the effect that the signer's practices and policies do not discriminate on the grounds of race, color, creed, or national origin, and that the signer either will affirmatively cooperate in the implementation of the policy and provisions of this Order or that it consents and agrees that recruitment, employment, and the terms and conditions of employment under the proposed contract shall be in accordance with the purposes and provisions of the Order. In the event that the union, or the agency shall refuse to execute such a statement, the Compliance Report shall so certify and set forth what efforts have been made to secure such a statement and such additional factual material as the contracting agency or the Secretary of Labor may require.

Sec. 204. The Secretary of Labor may, when he deems that special circumstances in the national interest so require, exempt a contracting agency from the requirement of including any or all of the provisions of Section 202 of this Order in any specific contract, subcontract, or purchase order. The Secretary of Labor may, by rule or regulation, also exempt certain classes of contracts, subcontracts, or purchase orders (1) whenever work is to be or has been performed outside the United States and no recruitment of workers within the limits of the United States is involved; (2) for standard commercial supplies or raw materials; (3) involving less than specified

amounts of money or specified numbers or workers; or (4) to the extent that they involve subcontracts below a specified tier. The Secretary of Labor may also provide, by the rule, regulation, or order, for the exemption of facilities of a contractor which are in all respects separate and distinct from activities of the contractor related to the performance of the contract: Provided, That such an exemption will not interfere with or impede the effectuation of the purposes of this Order: And provided further, That in the absence of such an exemption all facilities shall be covered by the provisions of this Order.

SUBPART C POWERS AND DUTIES OF THE SECRETARY OF LABOR AND THE CONTRACTING AGENCIES

Sec. 205. Each contracting agency shall be primarily responsible for obtaining compliance with the rules, regulations, and orders of the Secretary of Labor with respect to contracts entered into by such agency or its contractors. All contracting agencies shall comply with the rules of the Secretary of Labor in discharging their primary responsibility for securing compliance with the provisions of contracts and otherwise with the terms of this Order and of the rules, regulations, and orders of the Secretary of Labor issued pursuant to this Order. They are directed to cooperate with the Secretary of Labor and to furnish the Secretary of Labor such information and assistance as he may require in the performance of his functions under this Order. They are further directed to appoint or designate, from among the agency's personnel, compliance officers. It shall be the duty of such officers to seek compliance with the objectives of this Order by conference, conciliation, mediation, or persuasion.

Sec. 206. (a) The Secretary of Labor may investigate the employment practices of any Government contractor or subcontractor, or initiate such investigation by the appropriate contracting agency, to determine whether or not the contractual provisions specified in Section 202 of this Order have been violated. Such investigation shall be conducted in accordance with the procedures established by the Secretary of Labor and the investigating agency shall report to the Secretary of Labor any action taken or recommended.

(b) The Secretary of Labor may receive and investigate or cause to be investigated complaints by employees or prospective employees of a Government contractor or subcontractor which allege discrimination contrary to the contractual provisions specified in Section of 202 of this Order. If this investigation is conducted for the Secretary of Labor by a contracting agency, that agency shall report to the Secretary what action has been taken or is recommended with regard to such complaints.

Sec. 207. The Secretary of Labor shall use his best efforts, directly and through contracting agencies, other interested Federal, State, and local agencies, contractors, and all other available instrumentalities to cause any labor union engaged in work under Government contracts or any agency referring workers or providing or supervising apprenticeship or training for or in the course of such work to cooperate in the implementation of the purposes of this Order. The Secretary of Labor shall, in appropriate cases, notify the Equal Employment Opportunity Commission, the Department of Justice, or other appropriate Federal agencies whenever it has reason to believe that the practices of any such labor organization or agency violate Title VI or Title VII of the Civil Rights Act of 1964 or other provision of Federal law.

Sec. 208. (a) The Secretary of Labor, or any agency, officer, or employee in the executive branch of the Government designated by rule, regulation, or order of the Secretary, may hold such hearings, public or private, as the Secretary may deem advisable for compliance, enforcement, or educational purposes.

(b) The Secretary of Labor may hold, or cause to be held, hearings in accordance with Subsection (a) of this Section prior to imposing, ordering, or recommending the imposition of penalties and sanctions under this Order. No order for debarment of any contractor from further

Government contracts under Section 209(a) (6) shall be made without affording the contractor an opportunity for a hearing.

SUBPART D SANCTIONS AND PENALTIES

Sec. 209. (a) In accordance with such rules, regulations, or orders as the Secretary of Labor may issue or adopt, the Secretary or the appropriate contracting agency may:

(1) Publish, or cause to be published, the names of contractors or unions which it has concluded have complied or have failed to comply with the provisions of this Order or of the rules, regulations, and orders of the Secretary of Labor.

(2) Recommend to the Department of Justice that, in cases in which there is substantial or material violation or the threat of substantial or material violation of the contractual provisions set forth in Section 202 of this Order, appropriate proceedings be brought to enforce those provisions, including the enjoining, within the limitations of applicable law, of organizations, individuals, or groups who prevent directly or indirectly, or seek to prevent directly or indirectly, compliance with the provisions of this Order.

(3) Recommend to the Equal Employment Opportunity Commission or the Department of Justice that appropriate proceedings be instituted under Title VII of the Civil Rights Act of 1964.

(4) Recommend to the Department of Justice that criminal proceedings be brought for the furnishing of false information to any contracting agency or to the Secretary of Labor as the case may be.

(5) Cancel, terminate, suspend, or cause to be cancelled, terminated, or suspended, any contract, or any portion or portions thereof, for failure of the contractor or subcontractor to comply with the nondiscrimination provisions of the contract. Contracts may be cancelled, terminated, or suspended absolutely or continuance of contracts may be conditioned upon a program for future compliance approved by the contracting agency.

(6) Provide that any contracting agency shall refrain from entering into further contracts, or extensions or other modifications of existing contracts, with any noncomplying contractor, until such contractor has satisfied the Secretary of Labor that such contractor has established and will carry out personnel and employment policies in compliance with the provisions of this Order.

(b) Under rules and regulations prescribed by the Secretary of Labor, each contracting agency shall make reasonable efforts within a reasonable time limitation to secure compliance with the contract provisions of this Order by methods of conference, conciliation, mediation, and persuasion before proceedings shall be instituted under Subsection (a) (2) of this Section, or before a contract shall be cancelled or terminated in whole or in part under Subsection (a) (5) of this Section for failure of a contractor or subcontractor to comply with the contract provisions of this Order.

Sec. 210. Any contracting agency taking any action authorized by this Subpart, whether on its own motion, or as directed by the Secretary of Labor, or under the rules and regulations of the Secretary, shall promptly notify the Secretary of such action. Whenever the Secretary of Labor makes a determination under this Section, he shall promptly notify the appropriate contracting agency of the action recommended. The agency shall take such action and shall report the results thereof to the Secretary of Labor within such time as the Secretary shall specify.

Sec. 211. If the Secretary shall so direct, contracting agencies shall not enter into contracts with any bidder or prospective contractor unless the bidder or prospective contractor has satisfactorily complied with the provisions of this Order or submits a program for compliance acceptable to the Secretary of Labor or, if the Secretary so authorizes, to the contracting agency.

Sec. 212. Whenever a contracting agency cancels or terminates a contract, or whenever a contractor has been debarred from further Government contracts, under Section 209(a) (6) because of noncompliance with the contract provisions with regard to nondiscrimination, the Secretary of Labor, or the contracting agency involved, shall promptly notify the Comptroller General of the United States. Any such debarment may be rescinded by the Secretary of Labor or by the contracting agency which imposed the sanction.

SUBPART E CERTIFICATES OF MERIT

Sec. 213. The Secretary of Labor may provide for issuance of a United States Government Certificate of Merit to employers or labor unions, or other agencies which are or may hereafter be engaged in work under Government contracts, if the Secretary is satisfied that the personnel and employment practices of the employer, or that the personnel, training, apprenticeship, membership, grievance and representation, upgrading, and other practices and policies of the labor union or other agency conform to the purposes and provisions of this Order.

Sec. 214. Any Certificate of Merit may at any time be suspended or revoked by the Secretary of Labor if the holder thereof, in the judgment of the Secretary, has failed to comply with the provisions of this Order.

Sec. 215. The Secretary of Labor may provide for the exemption of any employer, labor union, or other agency from any reporting requirements imposed under or pursuant to this Order if such employer, labor union, or other agency has been awarded a Certificate of Merit which has not been suspended or revoked.

PART III ---- NONDISCRIMINATION PROVISIONS IN FEDERALLY ASSISTED CONSTRUCTION CONTRACTS

Sec. 301. Each executive department and agency which administers a program involving Federal financial assistance shall require as a condition for the approval of any grant, contract, loan, insurance, or guarantee thereunder, which may involve a construction contract, that the applicant for Federal assistance undertake and agree to incorporate, or cause to be incorporated, into all construction contracts paid for in whole or in part with funds obtained from the Federal Government or borrowed on the credit of the Federal Government pursuant to such grant, contract, loan, insurance, or guarantee, or undertaken pursuant to any Federal program involving such grant, contract, loan, insurance, or guarantee, the provisions prescribed for Government contracts by Section 202 of this Order or such modification thereof, preserving in substance the contractor's obligations thereunder, as may be approved by the Secretary of Labor, together with such additional provisions as the Secretary deems appropriate to establish and protect the interest of the United States in the enforcement of those obligations. Each such applicant shall also undertake and agree (1) to assist and cooperate actively with the administering department or agency and the Secretary of Labor in obtaining the compliance of contractors and subcontractors with those contract provisions and with the rules, regulations, and relevant orders of the Secretary, (2) to obtain and to furnish to the administering department or agency and to the Secretary of Labor such information as they may require for the supervision of such compliance, (3) to carry out sanctions and penalties for violations of such obligations imposed upon contractors and subcontractors by the Secretary of Labor or the administering department or agency pursuant to Part II, Subpart D, of this Order, and (4) to refrain from entering into any contract subject to this Order, or extension or other modification of such a contract with a contractor debarred from Government contracts under Part II, Subpart D, of this Order.

Sec. 302. (a) "Construction contract" as used in this Order means any contract for the construction, rehabilitation, alteration, conversion, extension, or repair of buildings, highways, or other improvements to real property.

(b) The provisions of Part II of the Order shall apply to such construction contracts, and for purposes of such application the administering department or agency shall be considered the contracting agency referred to therein.

(c) The term "applicant" as used in this Order means an applicant for Federal assistance or, as determined by agency regulation, other program participant, with respect to whom an application for any grant, contract, loan, insurance, or guarantee is not finally acted upon prior to the effective date of this Part, and it includes such an applicant after he becomes a recipient of such Federal assistance.

Sec. 303. (a) Each administering department or agency shall be responsible for obtaining the compliance of such applicants with their undertakings under this Order. Each administering department and agency is directed to cooperate with the Secretary of Labor, and to furnish the Secretary such information and assistance as he may require in the performance of his functions under this Order.

(b) In the event an applicant fails and refuses to comply with his undertakings, the administering department or agency may take any or all of the following actions: (1) cancel, terminate, or suspend in whole or in part the agreement, contract, or other arrangement with such applicant with respect to which the failure and refusal occurred; (2) refrain for extending any further assistance to the applicant under the program with respect to which the failure or refusal occurred until satisfactory assurance of future compliance has been received from such applicant; and (3) refer the case to the Department of Justice for appropriate legal proceedings.

(c) Any action with respect to an applicant pursuant to Subsection (b) shall be taken in conformity with Section 602 of the Civil Rights Act of 1964 (and the regulations of the administering department or agency issued thereunder), to the extent applicable. In no case shall action be taken with respect to an applicant pursuant to Clause (1) or (2) of Subsection (b) without notice and opportunity for hearing before the administering department or agency.

Sec. 304. Any executive department or agency which imposes by rule, regulation or order requirements of nondiscrimination in employment, other than requirements imposed pursuant to this Order, may delegate to the Secretary of Labor by agreement such responsibilities with respect to compliance standards, reports and procedures as would tend to bring the administration of such requirements into conformity with the administration of requirements imposed under this Order: Provided, That actions to effect compliance by recipients of Federal financial assistance with requirements imposed pursuant to Title VI of the Civil Rights Act of 1964 shall be taken in conformity with the procedures and limitations prescribed in Section 602 thereof and the regulations of the administering department or agency issued thereunder.

PART IV ---- MISCELLANEOUS

Sec. 401. The Secretary of Labor may delegate to any officer, agency, or employee in the Executive branch of the Government, any function or duty of the Secretary under Parts II and III of this Order, except authority to promulgate rules and regulations of a general nature.

Sec. 402. The Secretary of labor shall provide administrative support for the execution of the program known as the "Plans for Progress."

Sec. 403. (a) Executive Orders Nos. 10590 (January 19, 1955), 10722 (August 5, 1957), 10925 (March 6, 1961), 11114 (June 22, 1963), and 11162 (July 28, 1964), are hereby superseded and the President's Committee on Equal Employment Opportunity established by Executive Order No. 10925 is hereby abolished. All records and property in the custody of the Committee shall be transferred to the Civil Service Commission and the Secretary of Labor, as appropriate.
(b) Nothing in this Order shall be deemed to relieve any person of any obligation assumed or imposed under or pursuant to any Executive order superseded by this Order. All rules,

regulations, orders, instructions, designations, and other directives issued by the President's Committee on Equal Employment Opportunity and those issued by the heads of various departments or agencies under or pursuant to any of the Executive Orders superseded by this Order, shall, to the extent that they are not inconsistent with this Order, remain in full force and effect unless and until revoked or superseded by appropriate authority. References in such directives to provisions of the superseded orders shall be deemed to be references to the comparable provisions of this Order.

Sec. 404. The General Services Administration shall take appropriate action to revise the standard Government contract forms to accord with the provisions of this Order and of the rules and regulations of the Secretary of Labor.

Sec. 405. This Order shall become effective thirty days after the date of this Order.

Lyndon B. Johnson
The White House
September 24, 1965

EXECUTIVE ORDERS

No. 11375

October 17, 1967, 32 F.R. 14303

AMENDING EXECUTIVE ORDER NO. 11246, RELATING TO EQUAL EMPLOYMENT OPPORTUNITY

It is the policy of the United States Government to provide equal opportunity in Federal employment and in employment by Federal contractors on the basis of merit and without discrimination because of race, color, religion, sex or national origin.

The Congress, by enacting Title VII of the Civil Rights Act of 1964,[2] enunciated a national policy of equal employment opportunity in private employment, without discrimination because of race, color, religion, sex or national origin.

Executive Order No. 11246 of September 24, 1965,[3] carried forward a program of equal employment opportunity in Government employment, employment by Federal contractors and subcontractors and employment under Federally assisted construction contracts regardless of race, creed, color or national origin.

It is desirable that the equal employment opportunity programs provided for in Executive Order No. 11246 expressly embrace discrimination on account of sex.

NOW, THEREFORE, by virtue of the authority vested in me as President of the United States by the Constitution and statutes of the United States, it is ordered that Executive Order No. 11246 of September 24, 1965, be amended as follows:

(1) Section 101 of Part I, concerning nondiscrimination in Government employment, is revised to read as follows:

"Sec. 101. It is the policy of the Government of the United States to provide equal opportunity in Federal employment for all qualified persons, to prohibit discrimination in employment because of race, color, religion, sex or national origin, and to promote the full realization of equal employment opportunity through a positive, continuing program in each executive department and agency. The policy of equal opportunity applies to every aspect of Federal employment policy and practice."

(2) Section 104 of Part I is revised to read as follows:

"Sec. 104. The Civil Service Commission shall provide for the prompt, fair, and impartial consideration of all complaints of discrimination in Federal employment on the basis of race, color, religion, sex or national origin. Procedures for the consideration of complaints shall include at least one impartial review within the executive department or agency and shall provide for appeal to the Civil Service Commission."

(3) Paragraphs (1) and (2) of the quoted required contract provisions in section 202 of Part II, concerning nondiscrimination in employment by Government contractors and subcontractors, are revised to read as follows:

---

[1] 42 U.S.C.A. §2451 note.
[2] 42 U.S.C.A. §2000e et seq.
[3] 42 U.S.C.A. §2000e note.

"(1) The contractor will not discriminate against any employee or applicant for employment because of race, color, religion, sex or national origin. The contractor will take affirmative action to ensure that applicants are employed, and that employees are treated during employment, without regard to their race, color, religion, sex or national origin. Such action shall include, but not be limited to the following: employment, upgrading, demotion, or transfer; recruitment or recruitment advertising; layoff or termination; rates of pay or other forms of compensation; and selection for training, including apprenticeship. The contractor agrees to post in conspicuous places, available to employees and applicants for employment, notices to be provided by the contracting officer setting forth the provisions of this nondiscrimination clause.

"(2) The Contractor will, in all solicitations or advertisements for employees placed by or on behalf of the contractor, state that all qualified applicants will receive consideration for employment without regard to race, color, sex or national origin." (4) Section 203 (d) of Part II is revised to read as follows:

"(d) The contracting agency or the Secretary of Labor may direct that any bidder or prospective contractor or subcontractor shall submit, as part of his Compliance Report, a statement in writing, signed by an authorized officer or agent on behalf of any labor union or any agency referring workers or providing or supervising apprenticeship or other training, with which the bidder or prospective contractor deals, with supporting information, to the effect that the signer's practices and policies do not discriminate on the grounds of race, color, religion, sex or national origin, and that the signer either will affirmatively cooperate in the implementation of the policy and provisions of this order or that it consents and agrees that recruitment, employment, and the terms and conditions of employment under the proposed contract shall be in accordance with the purposes and provisions of the order. In the event that the union, or the agency shall refuse to execute such a statement, the Compliance Report, shall so certify and set forth what efforts have been made to secure such a statement and such additional factual material as the contracting agency or the Secretary of Labor may require."

The amendments to Part I shall be effective 30 days after the date of this order. The amendments to Part II shall be effective one year after the date of this order.

Lyndon B. Johnson
The White House
October 15, 1967

The rule below includes the amendments adopted to this subchapter on January 3, 2006.

Subchapter 9. Awarding Contracts for State Assisted Projects to Small Business Concerns Owned and Controlled by Socially and Economically Disadvantaged Individuals

7:22-9.1 Scope and purpose

(a) This subchapter establishes procedures for providing opportunities for socially and economically disadvantaged ("SED") contractors and vendors to supply materials and services under State financed construction contracts for environmental infrastructure facilities. To implement the policies established in N.J.S.A. 58:11B-26, 40:11A-41 et seq., and 52:32-17 et seq., this subchapter applies to environmental infrastructure projects receiving financial assistance from the Department and the Trust pursuant to N.J.A.C. 7:22-3, 4 and 6 and 7:22A-6 and 7. Under the provisions of N.J.A.C. 7:22-3, 4 and 6 and 7:22A-6 and 7, the Department and the Trust require recipients of Trust and Fund loans and other assistance to establish such programs for socially and economically disadvantaged small business concerns, to designate a project compliance officer, and to submit to the Department and Trust procurement plans for implementing the SED program. In addition, N.J.A.C. 7:22-3.17(a)24, 4.17(a)24, 6.17(a)24 and 7:22A-2.4(a) provide that a goal of not less than 10 percent be established for the award of contracts to small business concerns owned and controlled by one or more socially and economically disadvantaged individuals. The goal of 10 percent applies to the total amount of all contracts for building, materials and equipment, or services (including planning, design and building related activities) for a construction project. Where a local government unit has a SED participation goal which exceeds 10 percent of the total amount of all contracts, the local government unit must comply with both the Department's rules and the local minority and women-owned business ordinances.

(b) This subchapter also establishes the standards and procedures that will apply to the contracting agencies of grant or loan recipients in the awarding and making of contracts under their SED programs.

7:22-9.2 Definitions

The following words and terms, as used in this subchapter, will have the following meanings unless the content clearly indicates otherwise.

"Building" means the acquisition, erection, alteration, remodeling, improvement or extension of an environmental infrastructure facility.

"Construction" includes, but is not limited to:

1. The preliminary planning to determine the economic and engineering feasibility of environmental infrastructure facilities, the engineering, architectural, legal, fiscal, and economic investigations and studies, surveys, design, plans, working drawings, specifications, procedures, and other action necessary for the construction of environmental infrastructure facilities;

2. The building of, or purchase of land for, environmental infrastructure facilities; and

3. The inspection and supervision of the building of environmental infrastructure facilities.

"Contract" means any written agreement with a professional service or construction contractor related to the construction of an environmental infrastructure project.

"Contracting agency" means:

1. The governing body of a local government unit or any department, branch, board, commission, committee, authority, agency or officer of such local government unit possessing the authority to award and make contracts; or

2. The owner(s) or authorized representative(s) of a private entity.

"Contractor" means any party entering into a contract to provide or offering to provide building, materials and equipment, or services to a project sponsor for the construction of environmental infrastructure facilities. This includes, but is not limited to, planning and design, as well as building related services such as engineering, inspection and accounting.

"Contractor's plan" means the SED utilization plan submitted by the contractor to the project sponsor and to the Department establishing subcontracting opportunities that will fulfill the requirements of this subchapter.

"Department" means the New Jersey Department of Environmental Protection and its successors and assigns.

"Environmental infrastructure facilities" means wastewater treatment facilities, stormwater management facilities or water supply facilities.

"Financial agreement" means the legal instrument, including a grant agreement or loan agreement, executed between either the State of New Jersey or the Trust and the project sponsor for the construction of environmental infrastructure facilities.

"Local government unit" means a county, municipality, municipal or county sewerage or utility authority, municipal sewerage district, joint meeting, improvement authority or other political subdivision of the State authorized to construct, operate and maintain wastewater treatment or stormwater management facilities, or a State authority, district water supply commission, county, municipality, municipal or county utilities authority, municipal water district, joint meeting or any other political subdivision of the State authorized pursuant to law to operate or maintain a public water supply system or to construct, rehabilitate, operate or maintain water supply facilities or otherwise provide water for human consumption.

"New Jersey environmental infrastructure financing program" means the program for providing financing to project sponsors pursuant to N.J.A.C. 7:22-3, 4 and 6, and 7:22A-6 and 7.

"Office" means the Office of Equal Opportunity and Public Contract Assistance or other program of the Department of Environmental Protection with the responsibility for administration of this subchapter.

"Private entity" means the owner(s) of a nongovernmental community water system or a nonprofit noncommunity water system.

"Project" means the defined services for the construction of specified operable environmental infrastructure facilities as approved by the Department or the Trust in the project sponsor's financial agreement.

"Project compliance officer" means an officer or employee of the project sponsor who is designated by the project sponsor to monitor and enforce compliance with the affirmative action and SED requirements of the applicable program rules and this subchapter.

"Project plan" means the proposal submitted at the time of application by the project sponsor to the Department establishing the SED utilization plan and its requirements.

"Project sponsor" means any local government unit or private entity that seeks a loan or grant pursuant to N.J.A.C. 7:22-3, 4 and 6 and 7:22A-6 and 7.

"SED utilization plan" means a written document outlining the entire project work, the estimated length of time it will take to complete the project, each significant segment of the project on which SEDs will or may participate, and a description of how SEDs will be contacted.

"Socially and economically disadvantaged small business concern" or "SED" means any small business concern:

1. Which is at least 51 percent owned by one or more socially and economically disadvantaged individuals; or, in the case of a publicly owned business, at least 51 percent of the stock of which is owned by one or more socially and economically disadvantaged individuals; or, in the case of a joint venture, at least 51 percent of the beneficial ownership interests are legitimately held by a SED; and

2. Whose management and daily business operations are controlled by one or more socially and economically disadvantaged individuals; and

3. Which is a full participation subcontractor in that the SED is responsible for the execution of a distinct element of work and carries out the work responsibility by actually performing, managing and supervising the task involved. Any deviation from this definition will automatically classify the SED as a broker, middleman or passive conduit. These three functions are contrary to the spirit of the Trust Act and will not qualify a SED enterprise for State of New Jersey certification; and

4. Which has been certified pursuant to the New Jersey Uniform Certification Act (N.J.S.A. 52:27H-1 et seq.) or pursuant to the provisions of 49 CFR Part 23 by the New Jersey Commerce and Economic Growth Commission, the New Jersey Department of Transportation, the Port Authority of New York and New Jersey, the New Jersey Transit or other agencies deemed appropriate by the Office, as an eligible minority business or female business.

i. "Socially disadvantaged individuals" means those individuals who have been subjected to racial or ethnic prejudice or cultural bias because of their identity as a member of a group without regard to their individual qualities.

ii. "Economically disadvantaged individuals" means those socially disadvantaged individuals whose ability to compete in the free enterprise system has been impaired due to diminished capital and credit opportunities as compared to others in the same business area who are not socially disadvantaged.

iii. "Socially and economically disadvantaged individuals" shall include women, Black Americans, Hispanic Americans, Native Americans, Asian Americans, and members of other groups, or other individuals, found to be socially and economically disadvantaged by the Small Business Administration under Section 8(a) of the Small Business Act, as amended (15 USC 637(a)). Black Americans, Hispanic Americans, Native Americans and Asian Americans shall be defined as follows:

(1) "Black American" means a person having origins in any of the black racial groups in Africa;

(2) "Hispanic American" means a person of Spanish or Portuguese culture, with origins in Mexico, South or Central America, or the Caribbean Islands, regardless of race;

(3) "Asian American" means a person having origins in any of the original peoples of the Far East, Southeast Asia, Indian Subcontinent, Hawaii, or the Pacific Islands;

(4) "Native American" means a person having origins in any of the original peoples of North America.

"Small business concern" means a business which is independently owned and operated and which is not dominant in its field of operation. A business is independently owned and operated if the management which controls the business is responsible for both its daily and long term operations.

"Subcontract" means an agreement to perform a portion of a contract.

"Subcontractor" means a third party that is engaged by the contractor to perform part of the work under a subcontract.

"10 percent SED utilization," "10 percent goal" and "10 percent" means SED business concern participation, which includes 7 percent for minority-owned SED business concerns and 3 percent for women-owned SED business concerns.

"Trust" means the New Jersey Environmental Infrastructure Trust established pursuant to the Trust Act.

"Trust Act" means the New Jersey Environmental Infrastructure Trust Act (N.J.S.A. 58:11B-1 et seq.), as amended and/or supplemented.

7:22-9.3 SED utilization requirements for projects

(a) A goal of not less than 10 percent (or a higher percentage as may be required by Federal law) of the total amount of all contracts for building, materials and equipment, or services for a project funded by a New Jersey environmental infrastructure facilities financing program must be awarded to SEDs.

(b) The 10 percent SED utilization requirement shall be accomplished by the following:

1. Bids shall be solicited on an unrestricted basis. The bid documents, however, shall include a statement to the effect that the successful bidder must fulfill the SED utilization requirements by subcontracting portions or the work to SEDs; or

2. Contractors also have the option of establishing unrestricted bidding procedures to fulfill the 10 percent SED utilization requirement for the project.

7:22-9.4 Requirement to develop SED Utilization Plan

(a) Each project sponsor shall develop, in consultation with the Office, a plan for achieving its SED utilization requirements (the "project plan"). Development of a plan shall be completed before the Department and, when relevant, the Trust may approve an application pursuant to the applicable program rules

(b) The project plan shall identify those contracts proposed to be bid on an unrestricted basis. For each unrestricted contract, the project plan shall also identify the SED utilization requirements that the successful bidder shall meet.

(c) All contractors, including SED contractors, shall submit their own SED utilization plan ("contractor's plan"), for the aspects of the project covered by the contract, to the project sponsor and to the Office within 30 days of the awarding of a contract. The Contractor's Plan shall contain provisions to meet the specific SED utilization requirements imposed upon the contractor by the project sponsor as well as to meet the general SED utilization requirements for the project pursuant to this subchapter.

(d) If the contractor does not comply with the requirements of the contractor's plan and the project sponsor does not take steps to otherwise comply with N.J.A.C. 7:22-9.3(a), the Department and, in the case of a Trust loan, the Trust, may take any of the actions or combinations thereof specified in N.J.A.C. 7:22-3.40 through 3.44, 7:22-4.40 through 4.44, 7:22-6.40 through 6.44 and 7:22A-1.8 through 1.13.

7:22-9.5 (Reserved)

7:22-9.6 Notice of SED utilization opportunities

(a) All project sponsors, at least 30 days prior to public advertisement for bids, shall notify the agencies specified in N.J.A.C. 7:22-9.13(a)8, of the availability of opportunities for SEDs to provide

services, to bid on unrestricted contracts or subcontracts, or to provide any other necessary purchase or procurement. The notice shall include a description of the type and scope of the services involved.

(b) All notices shall include a statement to the effect that the project or contract is funded in part by New Jersey wastewater treatment financing programs and the successful bidder must comply with all the provisions of N.J.A.C. 7:22-9.1 et seq. for the participation of small business enterprises owned and controlled by socially and economically disadvantaged individuals.

7:22-9.7 Advertisements for SED utilization

(a) All advertisements for bids shall include a statement to the effect that the project or contract is funded in part by New Jersey environmental infrastructure financing programs and the successful bidder must comply with the provisions of N.J.A.C. 7:22-9 for the participation of small business enterprises owned and controlled by socially and economically disadvantaged individuals.

(b) The advertisement for bids shall indicate that:

1. Awards will be made only to socially and economically disadvantaged business concerns that are certified by the New Jersey Commerce, Economic Growth and Tourism Commission, the New Jersey Department of Transportation, the Port Authority of New York and New Jersey, New Jersey Transit or other agencies deemed appropriate by the Office as eligible minority businesses or female businesses; or

2. The invitation to bid is on an unrestricted basis whereby the successful bidder must fulfill the SED utilization requirements. The agencies specified in N.J.A.C. 7:22-9.13(a)8 will have a list of eligible SED firms and shall, upon request, provide them to the project sponsor. The project sponsor shall, during the advertisement phase, provide copies of the list to all contractors on unrestricted contracts.

(c) The advertisement for bids shall be in such newspaper or newspapers and other periodicals identified by the agencies specified in N.J.A.C. 7:22-9.13 as will best give notice thereof to appropriate bidders and shall be sufficiently in advance of the purchase or contract to promote competitive bidding. In no case shall the advertisement for bids be published less than 30 days prior to the date fixed for receiving bids on the purchase or contract.

(d) In the case of a set aside contract, the newspaper or newspapers in which the advertisement for bids appears shall be selected by the contracting agency in consultation with the Office.

(e) If there are no responses to the bid solicitation from SEDs or if the successful bidder's proposal does not meet the SED utilization requirements, the successful bidder shall advertise and continue the search for SED participants for a minimum of 30 days after the contract is awarded. The contract shall include a provision to this effect.

7:22-9.8 (Reserved)

7:22-9.9 (Reserved)

7:22-9.10 Lowest bid resulting in payment of unreasonable price

(a) If the contracting agency determines that the acceptance of the lowest responsible bid will result either in the payment of an unreasonable price or in a contract otherwise unacceptable pursuant to the statutes and rules governing public contracts, the contracting agency shall reject all bids.

(b) Bidders and the office shall be notified of the rejection of all bids, the reasons for the rejection, and the contracting agency's intent to solicit bids for a second time.

(c) If the contracting agency determines a second time that the acceptance of the lowest responsible bid will result either in the payment of an unreasonable price or in a contract otherwise unacceptable pursuant to the statutes and rules governing public contracts, the contracting agency shall reject all bids and notify the Office and, after receipt of the Office's approval, shall amend the project plan accordingly.

(d) Bidders shall be notified of the cancellation, the reasons for the cancellation and the contracting agency's intent to resolicit bids on an unrestricted basis. SEDs may participate in the bidding on an unrestricted basis.

7:22-9.11 Project compliance officer

(a) Each project sponsor shall designate an officer or employee to serve as its project compliance officer.

(b) The project compliance officer shall be responsible for coordinating SED utilization efforts on the project and for monitoring and enforcing compliance with the affirmative action and SED requirements of the applicable program rules.

(c) SED utilization requirements shall be an agenda item at all contract award meetings and, wherever applicable, at preconstruction conference meetings regardless of whether a loan or grant agreement has been executed or not. Each project sponsor shall be responsible for notifying the Office of the time and place of such meetings.

(d) The project compliance officer shall attend all monthly construction progress meetings.

7:22-9.12 Reports

(a) The contracting agency shall submit its planning and design SED utilization report to the Office at the time of filing of its grant/loan application.

(b) Each project compliance officer shall submit the contracting agency's monthly progress reports to the Office. Once all SED contractors have been obtained, submittal of this report will no longer be required.

(c) Each project compliance officer shall submit a periodic report on behalf of the project sponsor to the Office according to a schedule announced by the Office. At a minimum, this construction report shall be submitted quarterly; that is, January, April, July and October. Where appropriate, the Office may approve a variation in the frequency of reporting requirements specified in (b) through (d) of this section. This report shall include the following information:

1. The value of each contract and subcontract awarded to SEDs and the total dollar value and number of contracts and subcontracts awarded to SEDs;

2. The percentage of SED utilization in comparison to the cost of each contract, as well as the total percentage of SED utilization (including set aside contracts) in comparison to overall project costs;

3. The types and sizes of the participating SEDs and the nature of goods and services being provided; and

4. The efforts made to publicize and promote the project sponsor's SED utilization plan.

(d) Contractors shall submit a quarterly construction report to the project sponsor and to the Office. The project compliance officer may be contacted for assistance if needed.

(e) The report forms required by (a) through (d) above shall be obtained from the Office.

(f) The project compliance officer shall submit reports or information in addition to what is required by (a) through (c) above when requested to do so by the Office.

(g) Failure to comply with the reporting requirements of (a) through (d) and (f) above may subject the project sponsor to the remedies for noncompliance with State and Trust loan or grant conditions specified in the applicable program rules.

7:22-9.13 Assessment of compliance

(a) Where the Office determines that a project sponsor has failed or is failing to meet the 10 percent SED utilization requirement, the project sponsor shall, upon the written request of the Office, submit the following:

1. Advertisements;

2. Signed contracts and subcontracts;

3. Documentation of solicitations of bids from SEDs;

4. Copies of Requests for Proposals;

5. Records of telephone quotations;

6. (Reserved);

7. Adequate and timely notice for encouraging SED participation; and

8. Proof that the assistance of State Agencies was solicited, including:

Office of Equal Opportunity and Public Contract Assistance
New Jersey Department of Environmental Protection
PO Box 402
Trenton, New Jersey 08625-0402

Division for the Development of Small Businesses and Women Businesses and Minority Businesses
New Jersey Commerce and Economic Growth Commission
PO Box 835
1 West State Street
Trenton, New Jersey 08625-0835

(b) Where the project sponsor determines that a contractor has failed or is failing to meet the 10 percent SED utilization requirement, the contractor shall, upon the written request of the project sponsor, submit the documents specified in (a) above.

(c) The Office shall summarize in writing its evaluation of the reason given for noncompliance and the efforts made by the project sponsor or contractor to comply with its plan for achieving the 10 percent SED utilization requirement. The Office shall take into consideration good faith efforts made by the project sponsor or contractor to meet the goal to achieve the ten percent SED utilization requirement. These findings shall be submitted to the Department and, in the case of a Trust loan, to the Trust who, in conjunction with the Office, shall determine the nature and extent of the project sponsor's or contractor's noncompliance.

7:22-9.14 Penalties

Whenever a project sponsor or a contractor has failed to comply with the requirements of this subchapter, including the 10 percent requirement for SED utilization, the Department, or the Department and the Trust, in the case of a Trust loan recipient, may withhold all of the loan or grant money, or a portion thereof, and may take any of the other actions or combinations thereof specified in N.J.A.C. 7:22-3.40 through 3.44, 7:22-4.40 through 4.44, 7:22-6.40 through 6.44 and 7:22A-1.8 through 1.13 which are remedies for noncompliance with any of the conditions of a loan or grant.

7:22-9.15 Administrative hearings

(a) The Department and, in the case of a Trust loan, the Trust, shall make a determination regarding all disputes arising under this subchapter. The project sponsor shall specifically detail in writing the basis for its dispute. The Department and/or the Trust shall produce a decision in writing and mail or otherwise furnish a copy thereof to the project sponsor.

(b) A project sponsor may request an administrative hearing within 20 days of receipt of a decision by the Department and/or the Trust. The request for a hearing shall be sent to the Office of Legal Affairs, ATTENTION: Adjudicatory Hearing Requests, Department of Environmental Protection, PO Box 402, Trenton, New Jersey 08625-0402. The request for an administrative hearing shall specify in detail the basis for the appeal. Administrative hearings shall be conducted in accordance with the requirements of the Administrative Procedure Act, N.J.S.A. 52:14B-1 et seq. and the Uniform Administrative Procedure Rules, N.J.A.C. 1:1.

(c) Following receipt of a request for a hearing pursuant to (b) above, the Department and/or the Trust may attempt to settle the dispute by conducting such proceedings, meetings and conferences as deemed appropriate.

7:22-9.16 Severability

If any of the provisions of this subchapter are found to be invalid, the remainder of the provisions of this subchapter shall not be affected thereby.

OFFICE OF EQUAL OPPORTUNITY
AND
PUBLIC CONTRACT ASSISTANCE

MUNICIPAL FINANCE
AND
CONSTRUCTION ELEMENT

SED PARTICIPATION

BUILDING PHASE

QUARTERLY REPORTING FORM

FOR

CONTRACTING AGENCIES & CONTRACTORS

(OEO-002)

New Jersey Department of Environmental Protection

REPORTING REQUIREMENTS ON SOCIALLY AND ECONOMICALLY DISADVANTAGED (SED) BUSINESS UTILIZATION

These instructions apply to reporting on the utilization of Socially and Economically Disadvantaged Businesses (MBEs/WBEs/SEDs) under the New Jersey Department of Environmental Protection and the New Jersey Environmental Infrastructure Financing Programs. They are intended to provide guidance to Project Sponsors and Contractors in filling out the Building Phase (SED) Utilization Form. The reporting requirements apply to all Contracting Agencies and Contractors pursuing New Jersey Financing Assistance through programs administered by the New Jersey Department of Environmental Protection and the New Jersey Environmental Infrastructure Trust pursuant to N.J.A.C. 7:22-3.; N.J.A.C. 7:22-4.; N.J.A.C. 7:22-6; N.J.A.C. 7:22A-6; N.J.A.C. 7:22-7.

Each Project Sponsor and Contractor must submit this building SED Report (Form OEO-002) quarterly on MBE/WBE utilization for each contract for which a Project Sponsor or its Contractor(s) awards a subagreement. The form must be submitted to the New Jersey Department of Environmental Protection (NJDEP), Office of Equal Opportunity, Public Contract Assistance within 15 days following the close of each fiscal year quarter (i.e., January 15, April 15, July 15, and October 15).

INSTRUCTIONS FOR FILLING OUT SED UTILIZATION REPORT

1. Read instructions carefully before completing form, and refer to N.J.A.C. 7:22-9.1 et seq. for further guidance.

2a. The name and address of Project Sponser participating in the grant/loan programs for environmental infrastructure facilities.

2b. Name of the Project Compliance Officer responsible for submitting periodic reports.

3. Name and address of party contracting directly with the Project Sponsor.

4. Self-explanatory.

5a. The grant/loan project number for the agreement between the State of New Jersey and the Project Sponsor.

5b. The grant/loan project number for the contract between the Project Sponsor and its contractor(s).

6. Include brief description of project.

7. Self-explanatory.

8a. The county in which the Project Sponsor is located.

8b. The municipality in which the Project Sponsor is located.

9. The date of the agreement between the State of New Jersey and the Project Sponsor.

10a. The date of agreement between the Project Sponsor and the contractor.

10b. Self-explanatory.

11. Indicate MBE and WBE goals based upon project plan for SED utilization developed in consultation with the Office. These goals may vary depending upon local law. Where a Project Sponsor has a SED participation goal which exceeds ten percent, the Project Sponsor=s goal shall take precedence.

12. Enter the name, address and telephone number of each SED participating in the building phase as a subcontractor under agreement with the construction management firm or the Project Sponsor. Check applicable MBE or WBE status of each listed SED. Explain type of service rendered and list the total dollar amount of the subcontract. Each entry must be accompanied by a copy of the signed subcontract.

Restricted - Bids may be solicited on a restricted basis by setting aside a contract for building, materials and equipment, or services which is designated as a contract for which bids are invited and accepted only from SEDs.
Unrestricted - Bids may be solicited on an unrestricted basis and not designated for a set-aside contract, but the contract document shall include a statement to the effect that the successful bidder must fulfill the SED utilization requirements.

13. See instructions for Item 12. This section is designated for SEDs participating in the building phase of a project as a subcontractor under agreement with building contractor(s).

14. Person signing must be the designated Project Compliance Officer of the Project Sponsor. The contractor(s) or the authorized presentative of the contractor(s).

15. Additional comments or explanations. Refer to the specific item number on the form, if applicable.

OEO-002

NEW JERSEY DEPARTMENT OF ENVIRONMENTAL PROTECTION
NEW JERSEY MUNICIPAL FINANCE & CONSTRUCTION ELEMENT
OFFICE OF EQUAL OPPORTUNITY & PUBLIC CONTRACT ASSISTANCE

CONSTRUCTION REPORT

SOCIALLY AND ECONOMICALLY DISADVANTAGED (SED) BUSINESS UTILIZATION

1. ***Read Instructions Before Completing Form.***

2a. Project Sponsor

Name

_____

Address

_____

_____

2b. Project Compliance Officer _____

3. Contractor

Name

_____

Address

_____

_____

4. Financing Program *(check applicable program(s))*

_____a. Wastewater Treatment Fund _____b. Wastewater Treatment Trust _____c. Pinelands Infrastructure Trust

_____d. Stormwater Management _____e. Water Supply

5a. Project Number _____ 5b. Contract Number

_____

6. Project
Name _____

7. Contract Amount $ _____

8a. County _____ 8b. Municipality

_____

9. Date of Grant/Loan Agreement _____

10a. Date of Contract Award _____ 10b. Duration of Contract: Mo. _____ Days _____

11. STATE GOAL OR OTHER STANDARDS (IF ANY)

Contracting Agency=s Requirement

	DOLLAR AMOUNT	PERCENTAGE OF CONTRACT AMOUNT
MBE	$ _____	_____ %
WBE	$ _____	_____ %
TOTAL SED	$ _____	_____ %

12. A/E and Other Professional Service Subcontracts Awarded During the Building Phase

	Name, Address and Telephone No.	MBE/ WBE	Type of Service Rendered	Amount	Number	Dollar Amount	Subcontract Award	Subcontract (R/U)	Subcontract	Date of Subcontract	Type of Award*
1.											
	Number of Full-time Employees										
2.											
	Number of Full-time Employees										
3.											
	Number of Full-time Employees										
4.											
	Number of Full-time Employees										
5.											
	Number of Full-time Employees										
6.											
	Number of Full-time Employees										

* *Restricted/Unrestricted*

13. Other Subcontract Awards Made Under the Building Phase

Name, Address and Telephone No.	MBE/ WBE	Type of Service Rendered	Dollar Amount	Subcontract Number	Subcontract Award (R/U)	Subcontract Amount	Date of Subcontract	Type of Award*
1.								
Number of Full-time Employees								
2.								
Number of Full-time Employees								
3.								
Number of Full-time Employees								
4.								
Number of Full-time Employees								
5.								
Number of Full-time Employees								
6.								
Number of Full-time Employees								

* *Restricted/Unrestricted*

14. _____ _____

(Signature of Project Compliance Officer) *(Signature of Contractor)*

_____ _____

(Title) *(Title)*

_____ _____

(Date) *(Date)*

15. Space Provided for Additional Comments or Explanations

h:\plan1\emo002.wpd.br

OFFICE OF EQUAL OPPORTUNITY
AND
PUBLIC CONTRACT ASSISTANCE

MUNICIPAL FINANCE
AND
CONSTRUCTION ELEMENT

SED PARTICIPATION

MONTHLY PROGRESS REPORT

(OEO-003)

OEO-003

NEW JERSEY DEPARTMENT OF ENVIRONMENTAL PROTECTION SED UTILIZATION IN ENVIRONMENTAL INFRASTRUCTURE FINANCING PROGRAM

MONTHLY PROGRESS REPORT

Contractor_____

Project Number_____

Project Name_____

Contract Amount_____

Report Month/Year_____

The following information is required in order to assist the Project Compliance Officer and the New Jersey Department of Environmental Protection in monitoring the SED (small business enterprises owned and controlled by socially and economically disadvantaged individuals) Utilization progress and activity in the Environmental Infrastructure Financing Program. Each contractor shall respond to each of the listed items. Whenever evidence of completion of each item is available, copies of itemized documents are to be submitted to the Project Compliance Officer.

Over the past month has any action on any item taken place? Please explain each.

1.	Copies of Solicitation to SED=s	_____Yes	_____No
2.	Advertisement of bidding or procurement opportunities	_____Yes	_____No
3.	Evidence of negotiation with SEDs	_____Yes	_____No
4.	Copies of telephone quotes/negotiations	_____Yes	_____No
5.	Copies of signed subagreements	_____Yes	_____No
6.	Have any subcontracts been awarded in the past month	_____Yes	_____No

Please provide an explanation for Questions 1 through 6.

_____

_____

_____

_____

_____ _____

Signature of Contractor *Signature of Project Compliance Officer*

_____ _____

Date *Date*

Environment & Safety Library ISSN 1529-7918

NEW JERSEY ENVIRONMENT CODIFIED REGULATIONS
TITLE 7 — DEPARTMENT OF ENVIRONMENTAL PROTECTION
CHAPTER 22 — FINANCIAL ASSISTANCE PROGRAMS FOR ENVIRONMENTAL INFRASTRUCTURE FACILITIES

SUBCHAPTER 10. ENVIRONMENTAL ASSESSMENT REQUIREMENTS FOR STATE ASSISTED ENVIRONMENTAL INFRASTRUCTURE FACILITIES

Subchapter 10. Environmental Assessment Requirements for State Assisted Environmental Infrastructure Facilities

7:22-10.1 Scope and construction

[38 N.J.R. 139, 01/03/2006]

(a) This subchapter constitutes the rules of the New Jersey Department of Environmental Protection regarding the environmental assessment requirements for projects receiving financial assistance pursuant to N.J.A.C. 7:22-3, 4 and 6 and N.J.A.C. 7:22A-6 and 7.

(b) This subchapter shall be liberally construed to permit the Department to effectuate the purposes of the Bond Acts, the Trust Act, the Pinelands Infrastructure Trust Bond Act (P.L. 1985, c.302), the Sewage Infrastructure Improvement Act and future bond acts and appropriations passed to provide financial assistance for environmental infrastructure facilities.

(c) This subchapter is promulgated for the following purposes:

1. To implement the purposes and objectives of the Bond Acts, the Trust Act, the Pinelands Infrastructure Trust Bond Act, the Sewage Infrastructure Improvement Act and future bond acts and appropriations passed to provide financial assistance for environmental infrastructure facilities;

2. To establish environmental assessment requirements which must be complied with in order to receive financial assistance provided pursuant to N.J.A.C. 7:22-3, 4 and 6, and N.J.A.C. 7:22A-6 and 7;

3. To protect the public and the State of New Jersey by ensuring that funds appropriated are spent in a proper manner for the intended purposes while avoiding or minimizing adverse environmental impacts; and

4. To identify in a comprehensive manner the environmental objectives and constraints, planning and design requirements, and construction inspection procedures which must be observed in order to achieve the goal of avoiding or minimizing direct and indirect adverse environmental impacts.

7:22-10.2 Additional definitions

[32 N.J.R. 2426, 07/03/2000; 38 N.J.R. 139, 01/03/2006]

In addition to the words and terms defined at N.J.A.C. 7:22-3, 4, and 6 and N.J.A.C. 7:22A-1, the following words and terms are defined for the purposes of this subchapter:

"Administrative action" means Department approval of planning or design documents or offer of award for financial assistance.

"Agricultural Development Areas" means those areas designated as such pursuant to the Agriculture Retention and Development Act, N.J.S.A. 4:1C-11 et seq.

"Cultural resource" means any prehistoric or historic district, site, building, structure, or object listed in or eligible for listing in the New Jersey Register of Historic Places established pursuant to N.J.S.A. 13:1B-15.128 et seq., or the National Register of Historic Places, established pursuant to 16 U.S.C. 470a(6) (1982). Eligibility criteria for listing on the New Jersey Register of Historic Places are set forth at N.J.A.C. 7:4-1. Eligibility criteria for listing on the National Register of Historic Places are set forth at 36 CFR Part 60.6.

"Designated habitat" means an area which has been designated as critical habitat for an endangered species in accordance with the Federal Endangered Species Act, 16 U.S.C. §§1531 et seq.

"Direct impact" means an impact that is associated with the location and construction of a proposed project.

"Endangered species" means a plant or animal species which has been designated as endangered pursuant to either the New Jersey Endangered and Nongame Species Conservation Act, N.J.S.A. 23:2A-1 et seq., the Federal Endangered Species Act, 16 U.S.C. §§1531 et seq. or the Endangered Plant Species List Act, N.J.S.A. 13:1B-15.151 et seq.

"Environmentally constrained area" means areas in which development is in some way restricted including wetlands, vernal habitats, floodplains, endangered species sites or designated habitats, parks and preserves and Agricultural Development Areas.

"Environmentally critical area" means an area or feature which is of significant environmental value, including, but not limited to, wetlands, vernal habitats, floodplains, important farmlands, Agricultural Development Areas, steep slopes, endangered or threatened species and their designated habitats, important aquifer recharge areas, coastal areas, stream corridors, parks, and preserves.

"Floodplain" means the 100-year floodplain as delineated on Federal Emergency Management Agency maps or the area subject to regulation under the Flood Hazard Area Control Act, N.J.S.A. 58:16A-50 and implementing rules at N.J.A.C. 7:13, whichever is greater.

"Indirect impact" (also known as a "secondary impact") means an impact that may be

caused as a result of providing new or improved environmental infrastructure facilities, but not generally as the result of the physical construction of the facilities. Examples include new development made possible by improved environmental infrastructure and the impacts to natural areas, environmentally critical areas, water supply, water quality from nonpoint sources of pollution and air quality.

"Important farmlands" are those areas mapped as such on the United States Department of Agriculture, Soil Conservation Service, Important Farmlands maps, subject to update to reflect conversion of use.

"Planning area" means that area for which an environmental infrastructure project is proposed, including the proposed service area, as well as the extent of the area which could be impacted, directly or indirectly, by the proposed project and its integrally related components, as determined by the Department, whether or not funding is sought for each individual component of the environmental infrastructure facilities system.

"Professional qualified archaeologist" means an archaeologist whose credentials satisfy the criteria as set forth in the "Secretary of Interior's Standards and Guidelines for Archeology and Historic Preservation," 48 Fed. Reg. 44,716 (September 29, 1983).

"Provenience" means the cultural association of an object as well as its horizontal and vertical location at a site or surveyed area.

"Register" means the New Jersey Register of Historic Places and/or the National Register of Historic Places.

"Service area" means that area which is intended to be served by a proposed wastewater treatment, water supply or stormwater management project in the course of the design period.

"Significant" means a subjective determination in terms of both context and intensity of effect as defined at 40 CFR Part 1508.27.

"Threatened species" means a plant or animal species which has been designated as threatened pursuant to either the New Jersey Endangered and Nongame Species Conservation Act, N.J.S.A. 23:2A-1 et seq., and N.J.A.C. 7:25-4 or the Federal Endangered Species Act, 16 U.S.C. §§1531 et seq.

"Vernal habitat" means those areas designated as such pursuant to New Jersey Freshwater Wetlands Protection Act rules, at N.J.A.C. 7:7A-1.4.

"Water supply allocation" means the amount of water identified in the water supply allocation permit issued by the Department, pursuant to N.J.S.A. 58:1A-1 et seq. and N.J.A.C. 7:19, for the diversion of 100,000 or more gallons per day of ground or surface water for more than 30 days in a consecutive 365 day period for any purpose other than agricultural or horticultural purposes.

"Wetlands" means those areas defined as wetlands under any of the following statutes and implementing rules as applicable:

1. New Jersey Coastal Wetlands Act, N.J.S.A. 13:9A-1 et seq., at N.J.S.A. 13:9A-2, (Authority of Commissioner to adopt, modify or repeal orders regulating, altering, or

polluting coastal wetlands; coastal wetlands defined);

2. New Jersey Freshwater Wetlands Protection Act, N.J.S.A. 13:9B-1 et seq., at N.J.S.A. 13:9B-3, (Definitions, Freshwater Wetland), N.J.A.C. 7:7A-1.4 (Definitions, Freshwater wetland or wetland);

3. Coastal Area Facility Review Act, N.J.S.A. 13:19-1 et seq., at N.J.S.A. 13:19-4, (Coastal Area boundaries); N.J.A.C. 7:7E-3.25 (Wetlands); and

4. Pinelands Protection Act, N.J.S.A. 13:18-1 et seq., at N.J.S.A. 13:18A-3, (Definitions), and N.J.S.A. 13:18A-11, (Boundaries of pinelands and preservation areas; official state planning maps of Pinelands National Reserve, and pinelands protection and preservation areas); N.J.A.C. 7:50-3.1 (Purpose); N.J.A.C. 7:50-6.3 (Wetlands), N.J.A.C. 7:50-6.4 (Coastal Wetland) and N.J.A.C. 7:50-6.5 (Inland wetlands).

7:22-10.11 Design requirements

[32 N.J.R. 2426, 07/03/2000; 38 N.J.R. 139, 01/03/2006]

(a) The project sponsor shall prepare design plans and specifications which conform to the project alternative selected and approved in planning pursuant to the provisions of N.J.A.C. 7:22-10.4, 10.5 or 10.6 and which include mitigating measures developed during planning and incorporated in the approved planning documentation.

1. Any design revisions of the project which differ from the project as approved during planning shall be specifically identified.

2. Where any on-going environmental protection measures will be the responsibility of the project sponsor, the project sponsor shall submit a letter prior to loan award specifying that it will adhere to the scope of work approved by the Department.

(b) The contract documents shall be prepared to clearly identify environmental and cultural resources protection measures and shall conform to the following:

1. The format of the contract documents shall consolidate environmental and cultural resource protection/restoration measures in a single section of the design specifications as well as on appropriate sheets of the design plans. The specifications which spell out the environmental and cultural resource protection/restoration measures shall be identified in the specifications as having precedence over other potentially contradictory language contained elsewhere in the design contract documents. The specifications shall clearly state that, in instances where the provisions of a Department-issued permit contradict a provision of the specifications (including those identified in this subchapter), the environmental resources protection and/or restoration and cultural resource mitigation measures identified in the Department-issued permit shall govern.

2. Environmental resources protection and/or restoration measures, and cultural resource mitigation measures should generally include the following subject areas:

i. General;

ii. Clearing;

iii. Erosion and sedimentation control;

iv. Protection of environmentally critical areas;

v. Stockpiling and waste disposal;

vi. Prohibited construction procedures;

vii. Dust control;

viii. Noise control;

ix. Cultural resources;

x. Dewatering;

xi. Restoration;

xii. Environmental maintenance bond; and

xiii. Inspection.

3. The method of payment for environmental and cultural resource protection/restoration measures shall be specified in the applicable section of the contract documents. Where restoration and maintenance of environmental quality are necessary outside of the designated construction area or when measures for maintenance of environmental quality are required after the date of completion and acceptance of the environmental infrastructure facilities, the project sponsor shall clearly state the contractor's responsibilities in the specifications. The Department may require the project sponsor to include separate unit bid items for environmental and cultural resource restoration and/or mitigation.

4. Where construction will occur within or adjacent to environmentally critical areas, as approved by the Department, those areas shall be identified on design plans.

(c) Every effort shall be made to prevent and correct problems associated with erosion and sedimentation which could occur during and after project construction. At a minimum, design specifications shall incorporate the following erosion and sedimentation control measures:

1. All erosion and sedimentation control measures shall be in place prior to any grading operations or construction of proposed facilities and shall be maintained until construction is complete and the construction area is stabilized. After restoration is complete, temporary control measures shall be removed and disposed of properly.

2. All erosion and sedimentation control measures shall be constructed and maintained in accordance with the "Standards for Soil Erosion and Sediment Control in New Jersey," prepared by the New Jersey State Soil Conservation Committee, 1999, incorporated herein by reference, as amended and supplemented. Copies of the "Standards for Soil Erosion and Sedimentation Control in New Jersey" are available for a fee from the New Jersey Department of Agriculture. Soil Conservation Committee, or from the office of any of the 16 local conservation districts.

3. Disturbed areas that will be exposed in excess of 10 days shall be temporarily seeded

and/or mulched until proper weather conditions exist for establishment of a permanent vegetative cover.

(d) Site and access clearing must be confined to approved construction areas. Protection of existing vegetation must be practiced wherever possible. At a minimum, the project sponsor shall include provisions in the contract documents which conform to the following:

1. Temporary and permanent easement widths must be reduced to the minimum feasible for the proposed construction. Unless specifically approved by the Department, permanent access roads must not be more than eight feet wide and there shall be no permanent access roads in environmentally critical areas. Access roads may be paved only where absolutely necessary, as determined by the Department.

2. Only those portions of the site which are absolutely necessary and essential for construction shall be cleared. Whenever possible, excavation shall include the removal and storage of topsoil from the site for future use. The length of time of ground disturbance shall be reduced to the minimum practicable, especially in environmentally critical areas. Ground disturbance shall be avoided until immediately preceding construction to minimize exposure of soils.

3. Trees and shrubs within construction easements, which are not required to be removed to permit construction, shall be protected to the drip line with appropriate protection measures such as snow fencing or batter boards. Trees and shrubs whose removal is necessary to facilitate construction shall either be replanted at the same location or replaced with nursery stock of the same kind. Trees of greater than 12 inches in diameter should be preserved whenever possible by implementing slight shifts in alignment or tunneling under tree roots. Specimen trees, as identified in "New Jersey's Big Trees" (1998) published by the Department's Division of Parks and Forestry listing specimen trees in the State, shall be preserved.

4. Except in heavily wooded areas, the plans shall designate trees and shrubs which are to be protected as well as trees and shrubs which are to be removed. In addition, plans shall provide details which depict methods of protection to the drip line.

5. In heavily wooded areas, every effort shall be made to avoid the destruction of common native trees and shrubs so as not to unduly disturb the ecological balance or environmental quality of the area. Trees of 12 inch diameter or greater should be preserved whenever possible and protected to the drip line. Where practical, common native trees and shrubs, of one through three inch caliper, which must be cleared from the construction area shall be stockpiled for use in restoration. Straggling roots shall be pruned. Trees which must be pruned to facilitate construction shall be cut cleanly and painted with tree paint. If a tree not intended to be removed is damaged, the wood shall be repaired according to common nursery practice and painted with tree paint.

(e) Restoration measures to be identified and designated on the environmental plans and specifications include the following: ground preparation, topsoiling, fertilizing, liming, reseeding, and replanting/ replacement of trees and shrubs with native species. The aim of restoration is to restore the disturbed area to a condition as nearly equal to pre-disturbance condition as possible. The environmental specifications shall set forth the procedure for accomplishing these restoration measures. The plans shall include the

location of various types of restoration and shall include details depicting typical methods to accomplish restoration. The provisions shall include the following when applicable:

1. Final restoration shall be undertaken as soon as an area is no longer needed for construction, stockpiling or access. Excavated material unsuitable for backfill as set forth at N.J.A.C. 7:14-2.13 and considered to be solid waste pursuant to N.J.A.C. 7:26-1.6 shall be removed from the construction site and disposed of at a sanitary landfill approved and licensed by the Department. Excess excavated material which is not considered to be solid waste pursuant to N.J.A.C. 7:26-1.6 shall be graded or removed in accordance with (1)3 below. When access roads are no longer needed, road fill shall be removed and the access area shall be restored to pre-disturbance conditions. Care should be taken to avoid damage to adjacent vegetation and to prevent the formation of depressions that would serve as mosquito pools.

2. Topsoil shall be replaced with adequate amounts of topsoil material to restore the disturbed area to its original, pre-disturbance grade and depth of topsoil.

3. Rates and types of fertilization, liming, and seeding shall be as recommended by the local Soil Conservation District based on soil tests and local conditions. Seed mixtures shall be selected that are best suited for the particular site conditions. Seed selection shall provide for a quickly germinating initial growth, to prevent erosion, and for a secondary growth that will survive without continuing maintenance. Mulching shall occur immediately after seeding, and in no case shall more than five days elapse between seeding and mulching.

4. In wooded areas, for a 50-foot wide construction easement, generally 10 trees should be planted for every 100 feet of length of the easement. More trees would be required in wider easements or densely wooded areas. Plans shall include a restoration schedule specifying the quantity, common and botanic names, sizes, and spacing of trees to be planted and the type of seed mixtures to be used from station to station. Trees to be replaced should be trees native to New Jersey suitable for the particular site and generally should conform to the list of trees found in the "Standards for Soil Erosion and Sediment Control in New Jersey," prepared by the New Jersey State Soil Conservation Committee, 1999, incorporated herein by reference, as amended and supplemented.

5. In landscaped areas, environmental features shall be replaced or restored to pre-disturbance condition or better. This includes sodding, replacement of trees and shrubs, fences, drives, and other landscape features in kind.

(f) A listing of prohibited construction procedures shall be incorporated into the specifications. These procedures include, but are not limited to, the following:

1. Dumping of spoil material into any stream corridor, any wetlands, any vernal habitats, any surface waters, any sites listed or eligible for listing on the New Jersey or National Registers of Historic Places, or at unspecified locations;

2. Indiscriminate, arbitrary or capricious operation of equipment in any stream corridors, wetlands, vernal habitats, or surface waters;

3. Pumping of silt-laden water from trenches or other excavations into any surface waters, stream corridors, wetlands or vernal habitats;

4. Damaging vegetation adjacent to or outside of the access road or the right-of-way;

5. Disposal of trees, brush and other debris in any stream corridors, wetlands, surface waters or at unspecified locations;

6. Permanent or unspecified alteration of the flow line of any stream;

7. Open burning of project debris;

8. Use of calcium chloride, petroleum products, or other chemicals for dust control;

9. Use of asphaltic mulch binder; and

10. Any unpermitted discharge of sewage.

(g) Construction in wetlands shall conform to the requirements of the New Jersey Freshwater Wetlands Protection Act, N.J.S.A 13:9B-1 et seq., and N.J.A.C. 7:7A.

(h) Stream crossings shall conform to the requirements of the Flood Hazard Area Control Act, N.J.S.A. 58:16A-50 et seq., and N.J.A.C. 7:13.

(i) Slopes exceeding 15 percent require special treatment. Specifications shall call for measures such as water diversion berms, sodding, or the use of jute or excelsior blankets. Hay bales shall be placed at the base of the slope prior to ground disturbance. Steep slopes that have been disturbed, if not sodded, shall be seeded and mulched immediately after construction is complete. Slope boards or other measures necessary to prevent slumping of the disturbed slope shall be incorporated, where appropriate.

(j) If there is the possibility of encountering acid-producing deposits in the course of construction, as identified during the planning process, special requirements and conditions will apply and shall be incorporated in the specifications as follows:

1. In vegetated areas, the top two feet of soil shall be stripped and stockpiled separately from the material to be excavated. A soils specialist, to be provided by the project sponsor, shall monitor the stripping operation. If any acid-producing deposits are identified, this material and any contaminated soil shall be disposed of on the same day. The presence of acid-producing deposits is detected by the use of the following tests:

i. Determining the pH of the soil when suspended in 0.5 Molar calcium chloride solution (of neutral pH). A pH value below 3.0 indicates presence of ferrous sulfate and presence of acid-producing deposits is strongly suspected.

ii. Test for sulfate by adding a drop of 10 percent barium chloride solution to a water extract of the material. If voluminous flocks of barium sulfate form immediately the presence of acid-producing deposits is strongly suspected.

2. The disposal site shall be approved by the Department. Any soil of this type disposed of shall be covered with a minimum of two feet of cover to prevent rapid oxidation and subsequent acid formation.

3. In both vegetated and paved areas, when acid-producing deposits are encountered, as determined by the soil specialist, excavated trench material shall be returned to the trench as follows:

i. Lower material first, followed by upper material.

ii. The top one to two inches of soil on which the deeper soil was stockpiled shall be scraped and placed below a depth of two feet.

iii. For pipeline construction, the quantity of material to be displaced by bedding and pipe, as well as soil scraped from the stockpile area, shall be subtracted from the deeper, excavated material and this quantity of deeper material removed to an approved disposal site and covered as described (e)3 above.

iv. After backfilling the deeper soil, one ton of limestone per 2,000 square feet shall be spread over the deeper soil in the trench. This liming requirement is applicable in areas of well drained, nonsaturated soils, as determined by the soil specialist.

v. In vegetated areas, the top two feet of soil, stockpiled for this purpose, shall then be replaced. If the top two feet of soil was also contaminated, clean backfill material similar to the native topsoil shall be used in place of the contaminated material.

4. The excavated acid-producing deposits shall not be exposed for a period longer than eight hours. When acid-producing deposits are encountered, the trench opened in any construction day shall be backfilled and the areas cleaned up by the close of the day. Where this is impracticable, such as in the construction of pumping stations and treatment plants, exposed acid-producing deposits shall be covered with limestone screenings at a rate of 100 tons per acre and then covered with six inches of compacted soil within one week of exposure or before the exposed soil drops to pH 3, whichever occurs first. The pH shall be monitored daily under this procedure.

5. Temporary restoration of vegetated areas shall consist of mulching and shall be put in place at the end of each day's construction. Permanent restoration of the area shall begin as soon as construction is complete and after the results of incubation tests, where necessary, are available.

6. Prior to restoring vegetated areas, the soil specialist shall perform pH tests on the in-situ soil after the construction is completed. If the pH is below 4, intensive liming shall be required in order to make the soil suitable for plant survival.

7. Lime requirement tests shall be performed by the soil specialist to determine the lime application rates. This will require an incubation test in which the sample is oxidized for a period of six weeks, as follows:

i. The sample shall be air dried and ground so that the whole sample passes a 0.5 millimeter sieve.

ii. The lime requirement to reach pH 6.5 shall be determined initially, and again at two week intervals for six weeks, using standard soil testing techniques.

iii. The total lime requirement determined by this method can be extrapolated to the area under consideration.

8. A minimum of 30 tons of limestone per acre or the amount of lime required according to the incubation test result shall be applied prior to seeding and planting where the pH is less than 4. Where the pH is greater than 4, liming and fertilizing requirements set out in

the planting and environmental specifications shall apply.

9. The spreading and mixing of the subsoil and any topsoil contaminated with acid-producing deposits around the site and beyond the site is prohibited. Areas used for stockpiling acid-producing deposits shall be minimized. Equipment used for excavation and backfilling shall be cleaned, to the extent practicable, at the end of each day's operation and the soil removed shall be placed in the trench below a depth of two feet. No construction shall take place during significant rainstorms or while the area is saturated to avoid smearing or spreading of the acid-producing deposits over the area.

(k) When dewatering will occur and a dewatering permit is not required,the contractor shall monitor for adverse effects to structures or wellsdue to dewatering and shall be responsible to remedy same to the satisfactionof the Department. Discharges from dewatering activities which containsilt are subject to the following controls:

1. All discharges from dewatering activities to surface waters, wetlands, vernal habitats, or storm sewers shall be free of sediment. Care shall be taken not to damage or kill vegetation by excessive watering or by damaging silt accumulation in the discharge area. If discharges are sediment laden, techniques shall be employed to remove sediment prior to discharge. A sedimentation basin shall be constructed and used as specified, where necessary, to protect vegetation and to achieve environmental objectives.

2. Sewer inlets within construction areas shall be provided with perimeter hay bales or other appropriate siltation control measures.

(l) Contract requirements with regard to the location and control of stockpile, storage and disposal areas whether provided by the project sponsor or the contractor, must conform to the following:

1. Only environmentally suitable stockpile sites may be used for the purposes of staging or storing materials, equipment and suitable trench backfill material. Environmentally suitable sites must be level, and devoid of mature stands of natural vegetation. Drainage facilities and features, wetlands, vernal habitats, and stream corridors are not environmentally suitable sites.

2. The boundary of the stockpile area shall be clearly marked by hay bales, silt fencing or another appropriate method. Where fill is to be stored in excess of 10 days, a suitable means of protecting excavated material from wind and water erosion shall be employed. Erosion control methods may include one or more of the following: mulching, sprinkling, silt fencing, haybaling and stone covering.

3. Excess excavated material which is not considered to be solid waste pursuant to N.J.A.C. 7:26-1.6 shall be graded on-site only to the extent needed to achieve preconstruction grade, unless otherwise specifically approved by the Department. The project sponsor shall ensure that the contractor removes the remainder from the site and disposes of it at a site approved by the project sponsor in accordance with the following:

i. Disposal sites selected by the contractor shall be evaluated and approved by the project sponsor prior to their use. Disposal sites may also be selected by the project sponsor. The project sponsor shall conduct periodic inspection of disposal sites to ensure compliance with the requirements of this subsection during the off-site disposal operation.

ii. The disposal of excess excavated material in wetlands, vernal habitats, stream corridors and floodplains is strictly prohibited, even if the permission of the property owner is obtained. The contractor shall be responsible to remove any fill improperly placed by the contractor at the contractor's expense and restore the area impacted.

iii. If excess excavated material is placed on private property, a hold harmless release in favor of the project sponsor and the Department shall be obtained from the property owner; and

iv. Prior to approval of a site for excess excavated material disposal, where the site exceeds 5,000 square feet, the project sponsor shall obtain, or shall ensure that the contractor or property owner has obtained, the appropriate certification of the soil erosion and sediment control plan in accordance with the State's standards for soil conservation (N.J.S.A. 4:24-1 et seq., also referred to as Chapter 251). Where the site is less than 5,000 square feet, the project sponsor shall advise the property owner of the need for erosion and sediment control and obtain a statement that the property owner accepts complete responsibility for implementation of appropriate methods to prevent erosion and sedimentation.

(m) In order to control dust, as often as required during each working day, and particularly prior to the conclusion of each working day, areas under immediate construction (including access roads and other areas affected thereby) shall be swept and wet down with water sufficiently to lay dust. In addition, these areas shall be wet down during non-working hours (including weekends) as often as required to keep the dust under control. The use of calcium chloride or petroleum products or other chemicals for dust control is prohibited.

(n) In order to limit noise impacts in the vicinity of sensitive receptors, construction operations and activities shall be limited as follows: Mondaythrough Friday between the hours of 7:00 A.M. and 6:00 P.M. unless variances to these times are granted in times of emergency. No driving, pulling, or other operations entailing the use of vibratory hammers or compactors shall be permitted, other than between the hours of 8:00 A.M. and 5:00 P.M. The number of machines in operation at a given time shall be limited to the minimum practicable. All engine generators or pumps must have mufflers and be enclosed within a temporary structure.

(o) Provisions regarding the contractor's responsibility for cultural resource protection shall be included in contract documents that provide for the following:

1. If a cultural resource is encountered during the course of construction, the contractor is directed to halt all construction activities in that area. The contractor shall immediately contact the project sponsor who shall contact the Department. The Department will determine and require initiation of the appropriate actions in conformance with N.J.A.C. 7:22-10.8.

2. The contractor shall not dispose of excess excavated material at, stockpile construction materials at, or obtain borrow material from, properties which are listed or eligible for listing on the New Jersey or National Registers of Historic Places.

(p) The project sponsor shall require that the contractor supply an environmental maintenance bond in the amount of $25,000 or 50 percent of the price bid for the

materials needed to fulfill the environmental specifications, whichever is greater. The environmental maintenance bond shall provide that the contractor shall remedy, without cost, any defects which result from faulty workmanship or from failure to comply with the specifications and which develop during the period of one year from the expiration of the performance bond required pursuant to N.J.S.A. 40A:11-22.

(q) The project sponsor shall obtain photographs of existing conditions prior to the start of site and access clearing and construction. At a minimum, one eight inch by 10 inch color glossy print photograph shall be obtained for each 100 feet of the construction area. Special attention shall be given to environmentally critical areas and areas outside of the public right-of-way. Photographs shall be labeled by station so that upon completion of the construction, or during construction if necessary, subsequent photographs can be taken from the same control points. The project sponsor shall file copies of the above photographs with the Department. As a supplement to the required photographs, video documentation may be submitted to the Department, and is encouraged as a way of documenting site conditions.

7:22-10.12 Construction phase requirements

[32 N.J.R. 2426, 07/03/2000; 38 N.J.R. 139, 01/03/2006]

(a) The project sponsor must employ one, or more if warranted by the scope of the project, environmental inspector(s) to ensure that the requirements of the specifications relating to environmental and cultural resource protection and restoration are effectively carried out. Individuals designated as environmental inspectors by the project sponsor must possess, at a minimum, the education/experience qualifications of an Environmental Specialist employed with the Department. The Department will also conduct environmental inspections to oversee the conduct of the protection/restoration measures. Responsibilities of the project sponsor's environmental inspector(s) include the following:

1. Daily inspections of active work areas and periodic inspection of maintenance or restoration areas sufficient to ensure performance of protection measures in accordance with contract documents.

2. The maintenance of a daily job diary in which they shall record the progress of the work and of any problems encountered. The environmental inspectors shall notify the contractor in writing immediately upon noticing that environmental specifications are not being met.

3. At frequent intervals during construction, the recipient, the resident engineer, the environmental inspectors and the Department inspectors shall meet to review progress and to resolve difficulties that might result in unnecessary delays in the work. The Department shall notify the recipient if deficiencies are not immediately corrected. The recipient shall then direct compliance with environmental requirements.

(b) After award of a contract and before construction commences, a pre-construction conference shall be held. The recipient, the resident engineer, the environmental inspectors, the Department inspectors and the contractor should reach general agreement

upon procedures to be followed to comply with the plans and specifications intended to provide environmental and cultural resource protection and restoration that have been approved by the Department.

(c) A final inspection shall be required following completion of all construction and restoration work encompassed by each contract. The final inspection shall be conducted as follows:

1. Upon completion of all construction and restoration work of each contract of a project, the recipient shall submit a letter to the Department stating that the project (or contract) is ready for final inspection. No final inspection can be scheduled until formal notification is received.

2. The final inspection shall be a joint inspection with the recipient and/or the resident engineer, the environmental inspector, the contractor and representatives from the Department in attendance.

(d) The Department shall make periodic determinations and following the final inspection, make a final determination, regarding the adequacy of the contractor's performance of the specifications relative to environmental and cultural resource protection and restoration. If the performance is not acceptable, this finding and the procedures and schedules needed to effect acceptable performance will be conveyed in writing to the project sponsor. Failure of the project sponsor to comply with the Department's requirements may subject the project sponsor to the noncompliance provisions of N.J.A.C. 7:22-3.40, 4.40 and 6.40 and N.J.A.C. 7:22A-1.8.

SUPPLEMENTAL GENERAL CONDITIONS
NEW JERSEY ENVIRONMENTAL INFRASTRUCTURE FINANCING PROGRAM

1. Compliance with the Small Business Act

This project is financed in part by a loan from the New Jersey Environmental Infrastructure Financing Program.

The Owner expects that Contractor will meet his responsibility to select the best and least expensive subcontractors needed to provide high quality construction at the least cost to the public.

The Contractor is hereby advised that no less than 10 percent of the total amount of all contracts for building, materials or services for the project shall be awarded to small business concerns owned and controlled by socially and economically disadvantaged individuals as defined in Section 637(a) and 637(d) of the Small Business Act (15 U.S.C. 637(a) and 637(d)) and any regulations promulgated pursuant thereto. Procedures to be followed in implementing the requirement shall be found in the Local Public Contracts Law, N.J.S.A. 40A:11-41 et seq., and in guidelines to be published by the Department to assist in complying with statutory and regulatory reporting requirements.

2. Maintenance of Financial Records

The Contractor and all subcontractors shall maintain their books, records financial documents and all other financial records relevant to the Project pursuant to the Contract in accordance with generally accepted accounting principles.

3. State Treasurer's List of Debarred, Suspended and Disqualified Bidders

The Contractor, or an officer or partner of the bidder shall not, at the time of the bid, be included on the State Treasurer's List of debarred, suspended, or disqualified bidders. The Contractor shall immediately notify the Owner whenever it appears that the Contractor is on the State Treasurer's List. The Owner shall also immediately notify NJDEP whenever it appears that the Contractor is on the State Treasurer's List. The Contractor may be debarred, suspended, or disqualified from contracting with the State and the Department if the Contractor commits any of the acts listed in NJAC 7:1D-2.

Enclosed with the State Wage Rate Determination is a list of Contractors and subcontractors who are debarred from public works pursuant to N.J.S.A. 34:11-56.38. No contract will be awarded or made to the listed Contractors or subcontractors.

4. Access to Project Records

Representatives to NJDEP and the Owner and their agents shall have access to all work while in preparation or progress, off or on the site and the Contractor and all subcontractors shall provide proper and safe facilities therefore, including but not limited to ladders, scaffolds and protective equipment. The Owner, NJDEP or any of their duly authorized representatives shall have access to any such books, documents, papers and records relevant to the project maintained by the Contractor and all subcontractors for the purpose of making audit examinations, excerpts and transcriptions. The Contractor and all subcontractors shall preserve and maintain such records during project construction and until the final loan repayment has been made. The Contractor's and all subcontractors' facilities and records shall also be subject at all reasonable times to inspection and audit by the Owner and NJDEP and their duly authorized representatives during the period of performance of the Contract Work and until the final loan repayment has been made.

5. "S.E.D." Utilization Requirements

"Small Business Concerns Owned and Controlled by Socially and Economically Disadvantaged Individuals (SEDs)" Not less than 10 percent of the total amount of all contracts for building, materials

or services for the project shall be awarded to small business concerns owned and controlled by socially and economically disadvantaged individuals as defined in Section 637(a) and 637(d) of the Small Business Act (15 USC 637(a) and 637(d)), and any regulations promulgated thereto.

Contractor's Responsibility - The Contractor's Plan to meet SED Utilization Requirements shall be submitted by the successful bidder within 30 days of contract award. The Contractor's Plan will include statements of how the SED participation requirement shall be achieved over the duration of the project. Additional guidance on implementation of SED Requirements are included under NJAC 7:22-9 et seq.

The Contractor shall comply with all special requirements imposed by the Owner in order to fulfill the SED Utilization Requirement.

The SED Regulations NJAC 7:22-9 et seq. are included at the end of this section.

6. Environmental Assessment Requirements

The Contractor shall comply with all requirements of sub-chapter 10, Environmental Assessment Requirements for State Assisted Wastewater Treatment Facilities, from Chapter 22, Construction Grants for Wastewater Treatment Facilities. The Environmental Assessment Requirements NJAC 7:22-10.1, 7:22-10.11 and 7:22-10.12 are included at the end of this section.

7. Environmental and Cultural Resource Protection/Restoration Requirements of the NJDEP

The following items are Environmental and Cultural Resource Protection/Restoration requirements of the New Jersey Department of Environmental Protection (NJDEP) for projects funded under the New Jersey Environmental Infrastructure Financing Program and as such take precedence over any inconsistent provisions indicated or specified elsewhere within the construction plans and specifications.

All activities which are part of the comprehensive Environmental Infrastructure Project(s) for the planning area must conform to the requirements of the governing Environmental Infrastructure Financing Program regulations and the Contract Documents regardless of the eligibility of the individual components of the project for financial assistance.

The Environmental and Cultural Resource Protection/Restoration requirements include, but are not limited to, the following requirements listed below. The Contractor shall comply with all requirements of NJAC 7:22-10.1, 7:22-10.11 and 7:22-10.12 which are included at the end of this section.

7.1 Erosion and Sediment Control

Every effort shall be made to prevent and correct problems associated with erosion and sedimentation which could occur during and after project construction. At a minimum, erosion and sedimentation control measures shall conform to the following:

a. All erosion and sedimentation control measures shall be in place prior to any grading operations or construction of proposed facilities and shall be maintained until construction is complete and the construction area is stabilized. After restoration is complete, temporary control measures shall be removed and disposed of properly.

b. All erosion and sedimentation control measures shall be constructed and maintained in accordance with the current "Standards for Soil Erosion and Sediment Control in New Jersey, 1999", prepared by the New Jersey State Soil Conservation Committee, incorporated herein by reference, as amended and supplemented.

c. Disturbed areas that will be exposed in excess of 10 days shall be temporarily seeded and/or mulched until proper weather conditions exist for establishment of a permanent vegetative cover.

7.2 Site and Access Clearing

Site and access clearing must be confined to approved construction areas. Protection of existing vegetation must be practiced wherever possible. At minimum, site access and clearing measures must conform to the following:

a. The Contractor shall make every effort to avoid destruction of and damage to native trees and shrubs not designated to be removed, so as not to unduly disturb the ecological or environmental quality of the area.
b. Temporary and permanent easement widths must be reduced to the minimum feasible for the proposed construction. Unless specifically approved by the NJDEP, permanent access roads must not be more than eight feet wide and there shall be no permanent access roads in environmentally critical areas. Access roads may be paved only where absolutely necessary, as determined by the Owner and the NJDEP.

c. Only those portions of the site which are absolutely necessary and essential for construction shall be cleared. Whenever possible, excavation shall include the removal and storage of topsoil from the site for future use. The length of time of ground disturbance shall be reduced to the minimum practicable, especially in environmentally critical areas. Ground disturbance shall be avoided until immediately preceding construction to minimize exposure of soils.

d. Trees and shrubs within construction easements, which are not required to be removed to permit construction, shall be protected to the drip line with appropriate protection measures such as snow fencing or batter boards. Trees and shrubs whose removal is necessary to facilitate construction shall either be replanted at the same location or replaced with nursery stock of the same kind. Trees of greater than 12 inches in diameter should be preserved whenever possible by implementing slight shifts in alignment or tunneling under tree roots. Specimen trees, as identified in "New Jersey's Big Trees" (1998) published by the NJDEP Division of Parks and Forestry listing specimen trees in the State, shall be preserved.

e. In heavily wooded areas, every effort shall be made to avoid the destruction of common native trees and shrubs so as not to unduly disturb the ecological balance or environmental quality of the area. Trees of 12 inch diameter or greater should be preserved whenever possible and protected to the drip line. Where practical, common native trees and shrubs, of one through three inch caliper, which must be cleared from the construction area shall be stockpiled for use in restoration.

f. Straggling roots shall be pruned. Trees which must be pruned to facilitate construction shall be cut cleanly and coated with protective tree paint. If a tree not intended to be removed is damaged, the wood shall be repaired according to common nursery practice and painted with tree paint.

7.3 Wetlands

Construction in wetlands including wetlands transition areas shall conform to requirements imposed through applicable permits and, at a minimum, the following:

a. Before excavation is initiated in the wetlands, a line of hay bales or other siltation control barriers shall be staked in place along the edges of the construction area and shall

remain in place until restoration is complete. In addition, marsh mats shall be used for heavy construction equipment.

b. Topsoil shall be stripped and soil layers replaced in the excavated area in the same order that they were removed. Final grade shall match the elevation prior to disturbance to the extent that such match does not conflict with the Contract Documents.

c. The cleared land subject to easement shall be revegetated with a mix and density of species similar to that which was removed. Material for vegetation can be preserved from the areas cleared and replanted or provided from nursery stock.

d. Anti-seep collars shall be installed as needed in the trench to avoid draining the wetland.

e. Coastal wetland areas disturbed during the construction shall be restored to pre-disturbance conditions by an environmentally-oriented concern with documented successful experience in the restoration of wetland areas.

f. Construction in wetlands shall conform to requirements of the New Jersey Freshwater Wetlands Protection Act, N.J.S.A. 13:9B-1 et. seq., and N.J.A.C. 7:7A.

7.4 Stockpile, Storage and Disposal

Location and control of stockpile, storage and disposal areas must conform to the following:

a. Only environmentally suitable stockpile sites may be used for the purposes of staging or storing materials, equipment and suitable trench backfill material. Environmentally suitable sites must be level, and devoid of mature stands of natural vegetation. Drainage facilities and features, wetlands, vernal habitats, and stream corridors are not environmentally suitable sites.

b. The boundary of the stockpile area shall be clearly marked by hay bales, silt fencing or another appropriate method. Where fill is to be stored in excess of 10 days, a suitable means of protecting excavated material from wind and water erosion shall be employed. Erosion control methods may include one or more of the following: mulching, sprinkling, silt fencing, haybaling and stone covering.

c. Excess excavated material which is not considered to be solid waste pursuant to N.J.A.C. 7:26-1.6 shall be graded on-site only to the extent needed to achieve pre-construction grade, unless otherwise specifically approved by the NJDEP. The Contractor shall remove the remainder from the site and dispose of it at a site approved by the Engineer in accordance with the following:

    1. Disposal sites selected by the Contractor shall be evaluated and approved by the East Windsor Municipal Utilities Authority and/or their Engineer prior to their use. Disposal sites may also be selected by the East Windsor Municipal Utilities Authority and/or their Engineer. The East Windsor Municipal Utilities Authority and/or their Engineer shall conduct periodic inspection of disposal sites to ensure compliance with the requirements of this subsection during the off-site disposal operation.

    2. The disposal of excess excavated material in wetlands, vernal habitats, stream corridors and floodplains is strictly prohibited, even if the permission of the property owner is obtained.

3. The Contractor shall be responsible to remove any fill improperly placed by the Contractor at the Contractor's expense and restore the area impacted.

4. If excess excavated material is placed on private property, a hold harmless release in favor of the East Windsor Municipal Utilities Authority, its employees, its Engineer, its consultants, and the NJDEP shall be obtained from the property owner; and

5. Prior to approval of a site for excess excavated material disposal, where the site exceeds 5,000 square feet, the Contractor shall obtain or shall ensure that property owner has obtained, the appropriate certification from the local Soil Conservation District in accordance with the State's Standards for Soil Conservation (N.J.S.A. 4:24-1 et seq. also referred to as Chapter 251). Where the site is less than 5,000 square feet, the Contractor shall advise the property owner of the need for erosion and sediment control and obtain a statement that the property owner accepts complete responsibility for the implementation of appropriate methods to prevent erosion and sedimentation.

7.5 Dust Control

In order to control dust, as often as required during each working day, and particularly prior to the conclusion of each working day, areas under immediate construction (including access roads and other area affected thereby) shall be swept and wet down with water sufficiently to lay dust. In addition, these areas shall be wet down during non-working hours (including weekends) as often as required to keep dust under control. The use of calcium chloride or petroleum products or other chemicals for dust control is prohibited.

7.6 Noise Control

In order to limit noise impacts in the vicinity of sensitive receptors, construction operations and activities must be limited as follows. Time limits are Monday through Friday between the hours of 7:00 A.M. and 6:00 P.M. unless variances to these times are granted in times of emergency. No driving, pulling, or other operations entailing the use of vibratory hammers or compactors will be permitted, other than between the hours of 8:00 A.M. and 5:00 P.M. The number of machines in operation at a given time must be limited to the minimum practicable. All engine generators or pumps must have mufflers and be enclosed within a temporary structure.

7.7 Dewatering

When dewatering will occur in the vicinity of structures, vernal habitats or potable wells, the Contractor must monitor for adverse effects to structures or wells due to dewatering and will be responsible to remedy any adverse effects to the satisfaction of the NJDEP and the Engineer. Discharges from dewatering activities which contain silt or hydrogen sulfide are subject to the following controls:

a. All discharges from dewatering activities to surface waters, wetlands or storm sewers shall be free of sediment. Care shall be taken not to damage or kill vegetation by excessive watering or by damaging silt accumulation in the discharge area. If discharges are sediment laden, techniques shall be employed to remove sediment prior to discharge. A sedimentation basin shall be constructed and used as specified, where necessary, to protect vegetation and to achieve environmental objectives.

b. Sewer inlets within construction areas shall be provided with perimeter hay bales or other appropriate siltation control measures.

c. In coastal areas, it is possible that water emanating from dewatering operations may contain hydrogen sulfide concentration that could adversely impact areas to which the water is discharged. In these areas, at no time may the water emanating from dewatering operations be discharged if concentrations of hydrogen sulfide in excess of 40 parts per billion (ppb) are present. Prior to, and periodically during, dewatering, tests shall be conducted on the groundwater and dewatering discharge to determine if the hydrogen sulfide concentration is within the prescribed limits. In the even that these limits are exceeded, the Contractor shall pretreat the discharge water prior to disposal. Pretreatment must maintain the hydrogen sulfide concentrations at or below the 40-ppb level and must be in use during those times when dewatering is occurring and the specified concentrations are exceeded.

7.8 Air and Water Pollution and Solid Waste Control

The Contractor shall make himself aware of and shall comply with all current local, State and Federal regulations governing air and water pollution control and solid waste control, including especially, regulations prohibiting open burning of trees, logs, stumps, brush, vegetation, wood chips or construction debris. In no case shall any brush, vegetation or construction debris be buried on site. All such materials shall be removed and disposed of at off-site locations.

7.9 Prohibited Construction Activities

The Contractor shall refrain specifically from the below listed construction activities, as well as others which may be elsewhere specified in this Section or other Sections of the Specifications. Prohibited construction procedures include, but are not limited to, the following:

a. Dumping of spoil material into any stream corridor, any wetlands, any vernal habitats, any surface waters, any sites listed or eligible for listing on the New Jersey or National Registers of Historic Places, or at unspecified locations. Wherever in these specifications the term "stream corridor" is used, it shall mean and shall include the biophysical environment within the area carved by a natural watercourse between upland plateaus.

b. Indiscriminate, arbitrary, or capricious operation of equipment in any stream corridors, any wetlands, any vernal habitats, or any surface waters.

c. Pumping of silt-laden water from trenches or other excavations into any surface waters, any stream corridors, or any wetlands or any vernal habitats.

d. Damaging vegetation adjacent to or outside of the site boundaries, access road or right-of-way.

e. Disposal of trees, brush, and other debris in any stream corridors, any wetlands, any vernal habitats, any surface waters, or at unspecified locations.

f. Permanent or unspecified alteration of the flow line of any stream.

g. Open burning of project debris.

h. Washing and clean-up of trucks and other construction vehicles in any streams, surface waters, vernal habitats or wetlands.

i. Use of calcium chloride, petroleum products or other chemicals for dust control.

j. Use of asphaltic mulch binder.

k. Any unpermitted discharge of sewage.

l.

7.10 Steep Slopes

Slopes exceeding 15 percent require special treatment. Measures such as water diversion berms, sodding or the use of jute or excelsior blankets should be used as appropriate. Hay bales shall be placed at the base of the slope prior to ground disturbance. Steep slopes that have been disturbed, if not sodded, shall be seeded and mulched immediately after construction is complete. Slope boards or other measures necessary to prevent slumping of the disturbed slope shall be incorporated, where appropriate.

7.11 Site Restoration

The aim of site restoration is to restore the disturbed area to a condition as nearly equal to pre-disturbance condition as possible. At minimum, restoration measures shall conform to the following:

a. Final restoration shall be undertaken as soon as areas are no longer needed for construction, stockpile or access. Excavated material unsuitable for backfill as set forth at N.J.A.C. 7:14-2.13 and considered to be solid waste pursuant to N.J.A.C. 7:26-1.6 shall be removed from the construction site and disposed of at a sanitary landfill approved and licensed by NJDEP.

b. Excess excavated material which is not considered to be solid waste pursuant to N.J.A.C. 7:26-1.6 shall be graded or removed. When access roads are no longer needed, road fill shall be removed and the access area shall be restored to pre-disturbance conditions. Excavated stones and boulders shall be removed from the site.

c. Care shall be taken to avoid damage to adjacent vegetation and to prevent formation of depressions that would serve as mosquito breeding areas.

d. All installed hay bales and other soil erosion and sediment control materials and structures shall be removed. Areas to receive permanent stabilization shall be graded and/or prepared as shown on the Contract Drawings. Unconstructed areas of the site shall be restored to their original or proposed landscaped condition.

e. Topsoil shall be replaced with adequate amounts of topsoil material to restore the disturbed area to its original, pre-disturbance grade and depth of topsoil.

f. Rates and types of fertilization, liming and seeding shall be as recommended by the local Soil Conservation District based on soil tests and local conditions. Seed mixtures shall be selected that are best suited for the particular site conditions. Seed selection shall provide for a quickly germinating initial growth, to prevent erosion, and for a secondary growth that will survive without continuing maintenance. Mulching shall occur immediately after seeding, and in no case shall more than five days elapse between seeding and mulching.

g. In wooded areas, for a 50-foot wide construction easement, generally 10 trees should be planted for every 100 feet of length of the easement. More trees would be required in wider easements or densely wooded areas. Trees to be replaced should be trees native to New Jersey suitable for the particular site and generally should conform to the list of trees found in the "Standards for Soil Erosion and Sediment Control in New Jersey",

prepared by the New Jersey State Soil Conservation Committee, 1999, incorporated herein by reference, as amended and supplemented.

h. In landscaped areas, environmental features shall be replaced or restored to pre-disturbance condition or better. This includes sodding, replacement of trees and shrubs, fences, drives, and other landscape features in kind.

7.12 Stream Crossings

Where stream crossings are necessary, adverse impacts shall be minimized by including appropriate mitigating measures and restoration techniques. Construction involving stream crossings shall conform to all requirements imposed through applicable permits, and a minimum, mitigating measures and techniques shall include the following requirements:

a. Avoid clearing until immediately preceding construction.

b. Prior to clearing, place staked hay bales across the sloped approach to the crossing and maintain, except during actual crossing, until restoration is complete.

c. Avoid stockpiling material in the flood plain of the stream.

d. Set up in-stream sediment controls prior to commencing construction.

e. Complete crossing expeditiously. Consider weather and anticipated stoppages for weekends and holidays and plan to cross at such a time that the work can be continued until complete.

f. Maintain effectiveness of sediment control features throughout the crossing process.

g. Construction through stream corridors, wetlands and other surface waters shall be scheduled to minimize damage to fish populations wherever possible. Recommended periods during which construction is to take place shall be in accordance with N.J.A.C. 7:13-5.6(g) and N.J.A.C. 7:7E.

h. Restoration shall be initiated immediately following the crossing and be completed as soon as possible. Restoration shall conform to the following:

1. Re-establishing channel contours.

2. Replacing bottom with native material, or in very silty bottoms, with crushed stone (one through three-inch diameter).

3. Stabilizing banks with rip-rap. The size and nature of the rip-rap shall conform to the current "Standards for Soil Erosion and a Sediment Control in New Jersey", prepared by the New Jersey State Soil-Conservation Committee. Jute mesh may be used to stabilize intermittent or extremely low flow streams with shallowly sloping banks in sand/silt bottomed streams.

4. Revegetating banks with appropriate native material such as grasses, ground covers, trees and shrubs.

i. Stream crossings shall conform to the requirements of the Flood Hazard Area Control Act, N.J.S.A. 58:16A-50 et. seq., and N.J.A.C. 7:13.

7.13 Acid Producing Soils

If acid-producing deposits are encountered during the course of construction, the following special requirements and conditions shall apply:

a. In vegetated areas, the top two feet of soil shall be stripped and stockpiled separately from the material to be excavated. A soil specialist shall monitor the stripping operation. If any acid-producing deposits are identified, this material and any contaminated soil shall be disposed of on the same day. The presence of acid-producing deposits is detected by the use of the following tests:

   1. Determining the pH of the soil when suspended in 0.5 Molar calcium chloride solution (of neutral pH). A pH value below 3.0 indicates presence of ferrous sulfate and presence of acid-producing deposits is strongly suspected.

   2. Test for sulfate by adding a drop of 10 percent barium chloride solution to a water extract of the material. If voluminous flocks of barium sulfate form immediately the presence of acid-producing deposits is strongly suspected.

b. The disposal site shall be approved by the NJDEP. Any soil of this type disposed of shall be covered with a minimum of two feet of cover to prevent rapid oxidation and subsequent acid formation.

c. In both vegetated and paved areas, when acid-producing deposits are encountered, as determined by the soil specialist, excavated trench material must be returned to the trench as follows:

   1. In order of removal; lower material first, followed by upper aterial.

   2. The top one to two inches of soil on which the deeper soil was stockpiled shall be scraped and placed below a depth of two feet.

   3. For pipeline construction, the quantity of material to be displaced by bedding and pipe, as well as soil scraped from the stockpile area, shall be subtracted from the deeper, excavated material and this quantity of deeper material removed to an approved disposal site and covered as described above.

   4. After backfilling the deeper soil, one ton of limestone per 2,000 square feet shall be spread over the deeper soil in the trench. This liming requirement is applicable in areas of well drained, non-saturated soils, as determined by the soil specialist.

   5. In vegetated areas, the top two feet of soil, stockpiled for this purpose, shall then be replaced. If the top two feet of soil was also contaminated, clean backfill material similar to the native topsoil must be used in place of the contaminated material.

d. The excavated acid-producing deposits shall not be exposed for a period longer than eight hours. When acid-producing deposits are encountered, the trench opened in any construction day shall be backfilled and the areas cleaned up by the close of the day. Where this is impracticable, such as in the construction of pumping stations and treatment plants, exposed acid-producing deposits shall be covered with limestone screenings at a rate of 100 tons per acre and then covered with six inches of compacted soil within one week of exposure or before the exposed soil drops to pH 3, whichever occurs first. The pH shall be monitored daily under this procedure.

e. Temporary restoration of vegetated areas shall consist of mulching and shall be put in place at the end of each day's construction. Permanent restoration of the area shall begin as soon as construction is complete and after the results of incubation tests, where necessary, are available.

f. Prior to restoring vegetated areas, the soil specialist shall perform pH tests on the in-situ soil after the construction is completed. If the pH is below 4, intensive liming shall be required in order to make the soil suitable for plant survival.

g. Lime requirement tests must be performed by the soil specialist to determine the lime application rates. This shall require an incubation test in which the sample is oxidized for a period of six weeks, as follows:

1. The sample shall be air dried and ground so that the whole sample passes a 0.5-millimeter sieve.

2. The lime requirement to reach pH 6.5 shall be determined initially and again at two-week intervals for six weeks, using standard soil testing techniques.

3. The total lime requirement determined by this method can be extrapolated to the area under consideration.

h. At a minimum of 30 tons of limestone per acre or the amount of lime required according to the incubation test result shall be applied prior to seeding and planting where the pH is less than 4. Where the pH is greater than 4, liming and fertilizing requirements set out in the planting and environmental specifications shall apply.

i. The spreading and mixing of the subsoil and any topsoil contaminated with acid-producing deposits around the site and beyond the side is prohibited. Areas used for stockpiling acid-producing deposits shall be minimized. Equipment used for excavation and backfilling shall be cleaned, to the extent practicable, at the end of each day's operation and the soil removed shall be placed in the trench below a depth of two feet. No construction shall take place during significant rainstorms or while the area is saturated to avoid smearing or spreading of the acid-producing deposits over the area.

7.14 Cultural Resources

See Section 1020 of the Specifications for Cultural Resources requirements.

7.15 Environmental Maintenance Bond

See the Section of the Specifications entitled "Environmental Maintenance Bond" (pages EMB-1 through EMB-3) and Information for Bidders Section 0.17, "Security for Faithful Performance and Maintenance (Bonds)".

7.16 Photographs

See Information for Bidders Section 0.26, "Pre-construction and Progress Photographs" of the Specifications for Photograph requirements.

7.17 Construction Phase Observation Requirements

See Information for Bidders Section 0.44, "Project Observation" of the Specifications for Construction Phase Observation requirements.

8. Compliance with American Iron and Steel (AIS) Requirements

All shop drawing submittals involving iron and steel products shall comply with the American Iron and Steel (AIS) requirement in Section 436 of P.L. 113-76, Consolidated Appropriations Act, 2014, which requires that all iron and steel products used on State funded projects must be produced in the United States. Refer to Appendix A of these Specifications for detailed requirements concerning this provision.

The following sample certification must be provided with shop drawings to the Owner/Engineer for all material that must comply with the American Iron and Steel (AIS) requirements. Please refer to Appendix A "Implementation of American Iron and Steel provisions of P.L. 11376, Consolidated Appropriations Act, 2014" for AIS requirement details.

SAMPLE CERTIFICATIONS

The following information is provided as a sample letter of step certification for AIS compliance. Documentation must be provided on company letterhead.

Date: _____

Company Name: _____

Company Address: _____

City, State, Zip: _____

Subject: American Iron and Steel Step Certification for Project (XXXXXXX)

I, _____, certify that the (melting, bending, coating, galvanizing, cutting, etc.) process for manufacturing or fabricating) the following products and/or materials shipped of provided for the subject project is in full compliance with the American Iron and Steel requirement as mandated in EPA's State Revolving Fund Programs.

Item, Products and/or Materials:

1. _____
2. _____
3. _____
4. _____

Such process took place at the following location:

_____

If any of the above compliance statements change while providing material to this project we will immediately notify the prime Contractor and the Engineer.

_____
Signed by company representative

STATE WAGE RATES

STATE OF NEW JERSEY
Department of Labor and Workforce Development
Division of Wage and Hour Compliance - Public Contracts Section
PO Box 389
Trenton, NJ 08625-0389

PREVAILING WAGE RATE DETERMINATION

The New Jersey Prevailing Wage Act (N.J.S.A. 34:11-56.25 et seq.) requires that the Department of Labor and Workforce Development establish and enforce a prevailing wage level for workers engaged in public works in order to safeguard their efficiency and general well being and to protect them as well as their employers from the effects of serious and unfair competition.

Prevailing wage rates are wage and fringe benefit rates based on the collective bargaining agreements established for a particular craft or trade in the locality in which the public work is performed. In New Jersey, these rates vary by county and by the type of work performed.

Applicable prevailing wage rates are those wages and fringe benefits in effect on the date the contract is awarded. All pre-determined rate increases listed at the time the contract is awarded must also be paid, beginning on the dates specified. Rates that have expired will remain in effect until new rates are posted.

Prevailing Wage Rate

The prevailing wage rate for each craft will list the effective date of the rate and the following information:

W = Wage Rate per Hour **B** = Fringe Benefit Rate per Hour* **T** = Total Rate per Hour

* Fringe benefits are an integral part of the prevailing wage rate. Employers not providing such benefits must pay the fringe benefit amount directly to the employee each payday. Employers providing benefits worth less than the fringe benefit amount must pay the balance directly to the employee each payday.

Unless otherwise stated in the Prevailing Wage Rate Determination, the fringe benefit rate for overtime hours remains at the straight time rate.

When the Overtime Notes in the Prevailing Wage Rate Determination state that the overtime rates are "inclusive of benefits," the benefit rate is increased by the same factor as the wage rate (i.e. multiplied by 1.5 for time and one-half, multiplied by 2 for double time, etc.).

Apprentice Rate Schedule

An "apprentice" is an individual who is registered with the United States Department of Labor - Office of Apprenticeship and enrolled in a certified apprenticeship program during the period in which they are working on the public works project.

The apprentice wage rate is a percentage of the journeyman wage rate, unless otherwise indicated. The apprentice benefit rate is the full journeyman benefit rate, unless otherwise indicated.

If there is no apprentice rate schedule listed, the individual must be paid at least the journeyman rate even if that individual is in a certified apprentice program for that trade.

If there is no ratio of apprentices to journeymen listed for a particular craft, then the ratio shall be one (1) apprentice to every four (4) journeymen.

Comments/Notes

For each craft listed there will be comments/notes that cover the definition of the regular workday, shift differentials, overtime, recognized holidays, and any other relevant information.

Public Works Contractor Registration

The Public Works Contractor Registration Act (N.J.S.A. 34:11-56.48, et seq.) requires that **all** contractors, subcontractors, or lower tier subcontractors who are working on or who bid on public works projects register with the Department of Labor and Workforce Development. Applications are available at *www.nj.gov/labor* (click on Wage & Hour and then go to Registration & Permits).

Pursuant to N.J.S.A. 34:11-56.51:

No contractor shall bid on any contract for public work as defined in section 2 of P.L.1963, c. 150 (C.34:11-56.26) unless the contractor is registered pursuant to this act. No contractor shall list a subcontractor in a bid proposal for the contract unless the subcontractor is registered pursuant to P.L.1999, c.238 (C.34:11-56.48 et seq.) at the time the bid is made. No contractor or subcontractor, including a subcontractor not listed in the bid proposal, shall engage in the performance of any public work subject to the contract, unless the contractor or subcontractor is registered pursuant to that act.

Snow Plowing

Snow plowing contracts are not subject to the New Jersey Prevailing Wage Act or the Public Works Contractor Registration Act.

NEW JERSEY DEPARTMENT OF LABOR AND WORKFORCE DEVELOPMENT

PREVAILING WAGE RATE DETERMINATION

County - MERCER

Craft: Air Conditioning & Refrigeration - Service and Repair **PREVAILING WAGE RATE**

	05/10/19
Journeyman (Mechanic)	W39.08 B24.87 T63.95

Craft: Air Conditioning & Refrigeration - Service and Repair **APPRENTICE RATE SCHEDULE**

INTERVAL	PERIOD AND RATES									
As Shown	Mo. 1-3	Mo. 4-12	2nd Year	3rd Year	4th Year	5th Year		Wage = %	of Jnymn	Wage
Wage and Bene	50%	55%	60%	65%	75%	85%		Bene = %	of Jnymn	Bene

Ratio of Apprentices to Journeymen - 1:4

APPRENTICE RATE SCHEDULE FOR THOSE APPRENTICES ENTERING PROGRAM AFTER 3-1-13:

INTERVAL	PERIOD AND RATES					
As Shown	1st Year	2nd Year	3rd Year	4th Year	5th Year	Wage =% of Jnymn Wage
Wage and Benefit	40%	50%	60%	70%	80%	Bene. =% of Jnymn Bene

Craft: Air Conditioning & Refrigeration - Service and Repair **COMMENTS/NOTES**

THESE RATES MAY BE USED FOR THE FOLLOWING:
- Service/Repair/Maintenance Work to EXISTING facilities.
- Replacement or Installation of air conditioning and refrigeration equipment when the combined tonnage does not exceed 15 tons for refrigeration, or 25 tons for air conditioning.
- Replacement or Installation of "packaged" or "unitary" rooftop-type units when the combined tonnage of the units does not exceed 75 tons.

NOTE: These rates may NOT be used for any work in new construction (including work on new additions).

The regular workday shall consist of 8 hours, starting between 6:00 AM and 10:00 AM, Monday through Friday.

SHIFT DIFFERENTIALS:
- The second and third shifts shall be paid an additional 15% of the hourly rate.
- All shifts must run for a minimum of 5 consecutive days.

OVERTIME:
Hours worked in excess of 8 per day or before or after the regular workday, that are not shift work, and all hours on Saturday shall be paid at time and one-half the hourly rate, inclusive of benefits. All hours on Sunday and holidays shall be paid at double the hourly rate, inclusive of benefits.

RECOGNIZED HOLIDAYS: New Year's Day, Presidents' Day, Memorial Day, July 4th, Labor Day, Veterans' Day, Thanksgiving Day, Christmas Day.

NEW JERSEY DEPARTMENT OF LABOR AND WORKFORCE DEVELOPMENT

PREVAILING WAGE RATE DETERMINATION

County - MERCER

Craft: Boilermaker **PREVAILING WAGE RATE**

	01/01/19
Foreman	W49.72 B44.34 T94.06
General Foreman	W51.72 B45.34 T97.06
Journeyman	W44.72 B42.70 T87.42

Craft: Boilermaker **APPRENTICE RATE SCHEDULE**

INTERVAL	PERIOD AND RATES									
1000 Hours	65%	70%	75%	80%	85%	90%	95%			
Benefit =	36.36	37.26	38.18	39.07	39.39	40.89	41.79			

Ratio of Apprentices to Journeymen - *

* 1 apprentice will be allowed for the first 5 journeymen, 1 apprentice for the next 10 journeymen and 1 apprentice for each succeeding 20 journeymen up to a maximum of 5 apprentices per contractor on any one job.

Craft: Boilermaker **COMMENTS/NOTES**

HIGH WORK: All apprentices working on the erection, repair, or dismantling of smoke stacks, standpipes, or water towers shall be paid the Journeyman rate.

The regular workday shall consist of 8 hours, between 8:00 AM and 4:30 PM.

SHIFT DIFFERENTIALS:
- The second shift shall work 7½ hours and receive 8 hours pay, at a rate equal to the regular hourly rate plus 10%.
- The third shift shall work 7 hours and receive 8 hours pay, at a rate equal to the regular hourly rate plus 20%.
- For "Municipal Water Works" projects only, the following shall apply: Two, four day, 10 hour shifts may be worked at straight time Monday through Thursday. The day shift shall work four days, at 10 hours, for 10 hours pay. The second shift shall work four days, at nine and a half hours, for 10 hours pay, plus 10% the hourly rate for new work and .25 cents on repair work. Friday may be used as a make-up day at straight time, due to weather conditions, hoilday or any other circumstances beyond the employer's control.

OVERTIME:
- Hours in excess of 8 per day, Monday through Friday, and all hours on Saturdays shall be paid at time and one-half the hourly rate. All hours on Sundays and holidays (except Labor Day) shall be paid at double the hourly rate. All hours on Labor Day shall be paid at four times the hourly rate.
- If any other craft employed by the same contractor, or a subcontractor thereof, receives double time in lieu of time and one-half, then the Boilermaker shall receive double time in lieu of time and one-half.
- For "Municipal Water Works" projects only, the following shall apply: Four 10 hour days may be worked Monday through Thursday at straight time. Friday may be used as a make-up day for a day lost to inclement weather, holiday or other conditions beyond the control of the employer. Overtime shall be paid for any hours that exceed 10 hours per day or 40 hours per week.

RECOGNIZED HOLIDAYS: New Year's Day, Washington's Birthday, Memorial Day, July 4th, Labor Day, Presidential Election Day, Veterans' Day, Thanksgiving Day, Christmas Day. Sunday holidays observed the following Monday.

NEW JERSEY DEPARTMENT OF LABOR AND WORKFORCE DEVELOPMENT

PREVAILING WAGE RATE DETERMINATION

County - MERCER

Craft: Boilermaker - Minor Repairs **PREVAILING WAGE RATE**

	01/01/19
Foreman	W32.80 B16.37 T49.17
General Foreman	W33.30 B16.37 T49.67
Mechanic	W31.30 B16.37 T47.67

Craft: Boilermaker - Minor Repairs **COMMENTS/NOTES**

NOTE: These rates apply to MINOR REPAIR WORK ONLY (repair work in the field for which the contract amount does not exceed $125,000.00).

OVERTIME:
Hours in excess of 8 per day, Monday through Friday, and all hours on Saturdays shall be paid at time and one-half the hourly rate. All hours on Sundays and holidays (except Labor Day) shall be paid at double the hourly rate. All hours on Labor Day shall be paid at four times the hourly rate.

RECOGNIZED HOLIDAYS: New Year's Day, Washington's Birthday, Good Friday, Memorial Day, July 4th, Labor Day, Presidential Election Day, Thanksgiving Day, day after Thanksgiving, Christmas Day. Saturday holidays observed the preceding Friday, Sunday holidays observed the following Monday.

NEW JERSEY DEPARTMENT OF LABOR AND WORKFORCE DEVELOPMENT

PREVAILING WAGE RATE DETERMINATION

County - MERCER

Craft: Bricklayer, Stone Mason **PREVAILING WAGE RATE**

	05/01/19
Deputy Foreman	W46.20 B33.03 T79.23
Foreman	W49.20 B33.03 T82.23
Journeyman	W43.20 B33.03 T76.23

Craft: Bricklayer, Stone Mason **APPRENTICE RATE SCHEDULE**

INTERVAL	PERIOD AND RATES									
6 Months	40%	50%	55%	60%	65%	70%	75%	80%		
Benefits	3.86	4.83	5.31	5.80	21.83	23.27	24.72	26.15		

Ratio of Apprentices to Journeymen - 1:5

Craft: Bricklayer, Stone Mason **COMMENTS/NOTES**

The regular workday shall consist of 8 hours, between 6:00 AM and 4:30 PM.

SHIFT DIFFERENTIALS:

- When a 2 shift schedule (including a day shift) is established, the first, or day shift, shall be established on an 8 hour basis. The second shift shall be established on an 8 hour basis, and receive the regular rate plus 10%, inclusive of benefits.
- When a three shift schedule is established, the first shift shall be established on an 8 hour basis, the second shift on a 7.5 hour basis, and the third shift on a 7 hour basis. The first shift shall receive the regular hourly rate, the second shift shall receive the regular rate plus 10%, inclusive of benefits, and the third shift shall receive the regular rate plus 15%, inclusive of benefits.
- When there is no day shift, and a second or third shift is established, it shall be established on an 8 hour basis. The second shift shall receive the regular rate plus 10%, inclusive of benefits, and the third shift shall receive the regular rate plus 15%, inclusive of benefits.
- When an irregular shift must be established, this shift shall receive the regular rate plus 10%, inclusive of benefits.

OVERTIME:

- The first 2 hours in excess of 8 per day, or before or after the regular workday that are not shift work, Monday through Friday, shall be paid at time and one-half the regular rate, inclusive of benefits. Any additional overtime shall be paid at double the regular rate, inclusive of benefits. The first 10 hours on Saturday shall be paid at time and one-half the regular rate, inclusive of benefits. Any additional overtime shall be paid at double the regular rate, inclusive of benefits. All hours on Sundays and holidays shall be paid at double the regular rate, inclusive of benefits.
- Saturday may be used as a make-up day for hours lost to inclement weather.
- When Bricklayers/Stone Masons work on Saturday with Laborers, and no other crafts are working on the project for the day, benefits may be paid at straight time. If other crafts are present, the applicable overtime rate for benefits shall be paid.

County - MERCER

RECOGNIZED HOLIDAYS: New Year's Day, Presidents' Day, Memorial Day, July 4th, Labor Day, Presidential Election Day, Veterans' Day, Thanksgiving Day, Christmas Day. Sunday holidays will be observed the following Monday.

NEW JERSEY DEPARTMENT OF LABOR AND WORKFORCE DEVELOPMENT

PREVAILING WAGE RATE DETERMINATION

County - MERCER

Craft: Carpenter **PREVAILING WAGE RATE**

	05/10/19
Foreman	W58.00 B33.64 T91.64
Journeyman	W50.43 B29.33 T79.76

Craft: Carpenter **APPRENTICE RATE SCHEDULE**

INTERVAL	PERIOD AND RATES									
Yearly	40%	55%	65%	80%	90%					
Benefit	57% of	Appren	tice	Wage Rate	for all	intervals	+ $0.59			

Ratio of Apprentices to Journeymen - 1:3

Craft: Carpenter **COMMENTS/NOTES**

FOREMAN REQUIREMENTS:
- When there are 2 or more Carpenters on a job, 1 shall be designated as a Foreman.
- When there are 21 or more Carpenters on a job, 2 shall be designated as Foremen.

The regular workday shall consist of 8 hours, starting between 7:00 AM and 9:00 AM.

SHIFT DIFFERENTIALS:
- When a 2 shift schedule (including a day shift) is established, the day shift shall be established on an 8 hour basis. The second shift shall be established on an 8 hour basis, and receive the regular rate plus 15%, inclusive of benefits.
- When a three shift schedule is established, the first shift shall be established on an 8 hour basis, the second shift on a 7.5 hour basis, and the third shift on a 7 hour basis. The first shift shall receive the regular hourly rate, the second shift shall receive the regular rate plus 15% and the third shift shall receive the regular rate plus 20%, inclusive of benefits.
- When there is no day shift, and a second or third shift is established, it shall be established on an 8 hour basis. The second shift shall receive the regular rate plus 15% and the third shift shall receive the regular rate plus 20%, inclusive of benefits.

OVERTIME:
- All hours in excess of 8 per day, or before or after an established shift that are not shift work, and all hours on Saturdays shall be paid at time and one-half the hourly rate, inclusive of benefits. All hours on Sundays and holidays shall be paid at double the hourly rate, inclusive of benefits.
- Four 10-hour days may be worked, Monday to Thursday, at straight time. Friday may be used as a make-up day for a day lost due to inclement weather. If Friday is not a make-up day, all hours on Friday shall be paid at time and one-half the hourly rate, inclusive of benefits.

RECOGNIZED HOLIDAYS: New Year's Day, Presidents' Day, Memorial Day, July 4th, Labor Day, Presidential Election Day, Veterans' Day, Thanksgiving Day, Christmas Day. Sunday holidays observed the following Monday.

NEW JERSEY DEPARTMENT OF LABOR AND WORKFORCE DEVELOPMENT

PREVAILING WAGE RATE DETERMINATION

County - MERCER

Craft: Carpenter - Resilient Flooring **PREVAILING WAGE RATE**

	05/10/19
Foreman	W58.00 B33.55 T91.55
Journeyman	W50.43 B29.24 T79.67

Craft: Carpenter - Resilient Flooring **APPRENTICE RATE SCHEDULE**

INTERVAL	PERIOD AND RATES									
Yearly	40%	55%	65%	80%	90%					
Benefit	57%	of	Appren	tice	Wage Rate	for all	intervals	+ $0.49		

Ratio of Apprentices to Journeymen - *

* 1 apprentice shall be allowed to every 2 journeymen or major fraction thereof. No more than 3 apprentices on any one job or project.

Craft: Carpenter - Resilient Flooring **COMMENTS/NOTES**

FOREMAN REQUIREMENTS:
- On any job where there are 4 or more Carpenters of Resilient Flooring, 1 must be designated a Foreman.

FOR SYNTHETIC TURF INSTALLATION ONLY:
- The rate shall be 90% of the wage and benefit rate.

The regular workday consists of 8 hours, starting between 6:00 AM and 9:00 AM.

SHIFT DIFFERENTIALS:
- When a 2 shift schedule (including a day shift) is established, the day shift, shall be established on an 8 hour basis. The second shift shall be established on an 8 hour basis, and receive the regular wage rate plus 15%.
- When a three shift schedule is established, the first shift shall be established on an 8 hour basis, the second shift on a 7.5 hour basis, and the third shift on a 7 hour basis. The first shift shall receive the regular wage rate, the second shift shall receive the regular wage rate plus 15% and the third shift shall receive the regular wage rate plus 20%.
- When there is no day shift, and a second or third shift is established, it shall be established on an 8 hour basis. The second shift shall receive the regular wage rate plus 15% and the third shift shall receive the regular wage rate plus 20%.

OVERTIME:
- Hours in excess of 8 per day or 40 per week, or before or after the regular workday, Monday through Friday, shall be paid at time and one-half the wage rate. Saturday may be used as a make-up day, at straight time, up to 8 hours, for hours lost to reasons beyond the control of the employer, up to a total of 40 hours per week; hours in excess of 8 on Saturday shall then be paid at time and one-half the wage rate. If Saturday is not a make-up day, all hours on Saturday shall be paid at time and one-half the wage rate. All hours on Sundays and holidays shall be paid at double the wage rate.
- Four 10-hour days may be worked, Monday to Thursday, at straight time. Friday may be used as a make-up day for hours lost to reasons beyond the control of the employer. If Friday is not a make-up day, all hours on Friday shall be paid at time and one-half the wage rate.

NEW JERSEY DEPARTMENT OF LABOR AND WORKFORCE DEVELOPMENT

PREVAILING WAGE RATE DETERMINATION

County - MERCER

RECOGNIZED HOLIDAYS: New Year's Day, Presidents' Day, Memorial Day, July 4th, Labor Day, Presidential Election Day, Veterans' Day, Thanksgiving Day, Christmas Day. Sunday holidays will be observed the following Monday.

NEW JERSEY DEPARTMENT OF LABOR AND WORKFORCE DEVELOPMENT

PREVAILING WAGE RATE DETERMINATION

County - MERCER

Craft: Cement Mason **PREVAILING WAGE RATE**

See "Bricklayer, Stone Mason" Rates

Craft: Cement Mason **COMMENTS/NOTES**

See " Bricklayer, Stone Mason" Rates

NEW JERSEY DEPARTMENT OF LABOR AND WORKFORCE DEVELOPMENT

PREVAILING WAGE RATE DETERMINATION

County - MERCER

Craft: Diver **PREVAILING WAGE RATE**

	11/02/18
Diver	W58.74 B46.87 T105.61
Tender	W47.00 B46.87 T93.87

Craft: Diver **COMMENTS/NOTES**

NOTE: All dive crews must consist of a Tender, a Diver, and a standby Diver (standby Diver is the same rate as a Diver).

DEPTH & PENETRATION RATES: Divers shall be paid the following depth and penetration rates, in addition to the regular hourly rate, when applicable:

AIR DIVES:
0-59 feet: No additional wage
60-74 feet: + $0.25 per foot
75-125 feet: + $0.78 per foot

MIXED GAS DIVES:
0-74 feet: No additional wage
75-125 feet: + $1.00 per foot
126-200 feet: + $2.00 per foot

PENETRATION DIVES:
126-200 feet: + $1.50 per foot
201-275 feet: + $1.75 per foot
276-350 feet: + $2.00 per foot
351-425 feet: + $2.50 per foot

OVERTIME:
Hours in excess of 8 per day, Monday through Friday, and all hours on Saturdays shall be paid at time and one-half the hourly rate. All hours on Sundays and holidays shall be paid at double the hourly rate.

RECOGNIZED HOLIDAYS: New Year's Day, Presidents' Day, Memorial Day, July 4th, Labor Day, Veterans' Day, Presidential Election Day, Thanksgiving Day, Christmas Day. Veterans' Day may be switched with the day after Thanksgiving.

NEW JERSEY DEPARTMENT OF LABOR AND WORKFORCE DEVELOPMENT

PREVAILING WAGE RATE DETERMINATION

County - MERCER

Craft: Dockbuilder **PREVAILING WAGE RATE**

	11/02/18
Foreman	W54.05 B46.87 T100.92
Foreman (Concrete Form Work)	W53.25 B33.76 T87.01
Journeyman	W47.00 B46.87 T93.87
Journeyman (Concrete Form Work)	W46.30 B33.76 T80.06

Craft: Dockbuilder **APPRENTICE RATE SCHEDULE**

INTERVAL	PERIOD AND RATES									
Yearly	18.80	23.50	30.55	37.60						
Benefit	31.25	for all	intervals							

Ratio of Apprentices to Journeymen - *

* When there are 4 or fewer Dockbuilders on a job, no more than 1 may be an apprentice. When there are 5 or more Dockbuilders, there may be 1 apprentice for every 5 Dockbuilders.

Craft: Dockbuilder **COMMENTS/NOTES**

APPRENTICE RATE SCHEDULE FOR CONCRETE FORM WORK ONLY:

INTERVAL PERIOD AND RATES
Yearly 18.52 23.15 30.10 37.04
Benefits 23.24 for all intervals

CREOSOTE HANDLING:
When handling creosote products on land piledriving, floating marine construction, and construction of wharves, the worker shall receive an additional $0.25 per hour.

HAZARDOUS WASTE WORK:
- Hazardous waste removal work on a state or federally designated hazardous waste site where Level A, B, or C personal protection is required: an additional 20% of the hourly rate, per hour.
- Hazardous waste removal work in Level D, or where personal protection is not required: an additional $1.00 per hour.

CERTIFIED WELDER: When required on the job by the project owner, a Certified Welder shall receive an additional $1.00 per hour.

FOREMAN REQUIREMENTS:
The first Dockbuilder on the job shall be designated a Foreman.

OVERTIME:
Hours in excess of 8 per day, Monday through Friday, and all hours on Saturdays shall be paid at time and one-half the hourly rate. All hours on Sundays and holidays shall be paid at double the hourly rate.

RECOGNIZED HOLIDAYS: New Year's Day, Presidents' Day, Memorial Day, July 4th, Labor Day, Veterans' Day, Presidential Election Day, Thanksgiving Day, Christmas Day. Veterans' Day may be switched with the day after Thanksgiving.

NEW JERSEY DEPARTMENT OF LABOR AND WORKFORCE DEVELOPMENT

PREVAILING WAGE RATE DETERMINATION

County - MERCER

Craft: Drywall Finisher **PREVAILING WAGE RATE**

	11/01/18
Foreman	W43.95 B24.40 T68.35
General Foreman	W45.94 B24.40 T70.34
Journeyman	W39.95 B24.40 T64.35

Craft: Drywall Finisher **APPRENTICE RATE SCHEDULE**

INTERVAL	PERIOD AND RATES									
6 Months	40%	50%		60%	70%		80%	90%		
Benefits	Intervals	1 to 2 =	10.65	Intervals	3 to 4 =	13.17	Intervals	5 to 6 =	16.25	

Ratio of Apprentices to Journeymen - 1:4

Craft: Drywall Finisher **COMMENTS/NOTES**

The regular workday shall consist of 8 hours between 7:00 AM and 5:30 PM.

SHIFT DIFFERENTIALS:
- The second shift shall receive an additional 10% of the hourly rate, per hour, and the third shift shall receive an additional 15% of the hourly rate, per hour.
- When 3 shifts are worked, the second shift shall receive 8 hours pay for 7.5 hours of work, and the third shift shall receive 8 hours pay for 7 hours of work.
- Shift work must run for a minimum of 5 consecutive workdays.

OVERTIME:
- Hours in excess of 8 per day, Monday through Friday, and all hours on Saturdays shall be paid at time and one-half the regular rate, inclusive of benefits. All hours on Sundays and holidays shall be paid at double the regular rate, inclusive of benefits.
- Saturday or Sunday may be used to make up a day lost to inclement weather, at straight time.

RECOGNIZED HOLIDAYS: New Year's Day, Memorial Day, July 4th, Labor Day, Presidential Election Day, Veterans' Day, Thanksgiving Day, Christmas Day. Saturday holiday observed the preceding Friday. Sunday holiday observed the following Monday.

NEW JERSEY DEPARTMENT OF LABOR AND WORKFORCE DEVELOPMENT

PREVAILING WAGE RATE DETERMINATION

County - MERCER

Craft: Electrician **PREVAILING WAGE RATE**

	04/01/19	07/06/20	10/04/21
Asst. General Foreman	W59.00 B37.42 T96.42	W0.00 B0.00 T98.42	W0.00 B0.00 T100.42
Crane Operator, High Voltage Splicer, Welder	W53.83 B34.19 T88.02	W0.00 B0.00 T90.02	W0.00 B0.00 T92.02
Foreman	W56.40 B35.79 T92.19	W0.00 B0.00 T94.19	W0.00 B0.00 T96.19
General Foreman	W64.10 B40.60 T104.70	W0.00 B0.00 T106.70	W0.00 B0.00 T108.70
Journeyman	W51.27 B32.59 T83.86	W0.00 B0.00 T85.86	W0.00 B0.00 T87.86

Craft: Electrician **APPRENTICE RATE SCHEDULE**

INTERVAL	PERIOD AND RATES									
Yearly	15.06	17.57	20.08	25.10	35.14					
Benefits	62.48% of	Apprentic e	Wage	Rate	+ $0.31					

Ratio of Apprentices to Journeymen - 1:4

Craft: Electrician **COMMENTS/NOTES**

APPRENTICE RATE SCHEDULE AS OF 4-1-19:

INTERVAL	PERIOD AND RATES
Yearly	15.38 17.94 20.51 25.64 35.89
Benefits	62.48% of Apprentice Wage Rate + $0.56

FOREMAN REQUIREMENTS:
- When there are 2 or more electricians on the job, 1 shall be designated a Foreman.
- 1 additional Foreman shall be designated for every 10 additional electricians.
- When there are 2 or more Foremen on the job, 1 shall be designated a General Foreman.

The regular workday is 8 hours between 7:00 AM and 4:30 PM.

SHIFT DIFFERENTIAL:
- Shift work must run for a minimum of 5 workdays.
- 2nd Shift (4:30 PM-12:30 AM) shall receive 8 hours pay for 7.5 hours of work, plus an additional 10% of the hourly rate,

per hour, inclusive of benefits.
- 3rd Shift: (12:30 AM-8:00 AM) shall receive 8 hours pay for 7 hours of work, plus an additional 15% of the hourly rate, per hour, inclusive of benefits.

OVERTIME:
- The first 4 hours in excess of 8 per day, and hours before or after the regular workday that are not shift work, Monday through Friday, and the first 8 hours on Saturdays shall be paid at time and one-half the regular rate, inclusive of benefits. Hours in excess of 12 per day, Monday through Friday, in excess of 8 on Saturdays, and all hours on Sundays and holidays shall be paid at double the regular rate, inclusive of benefits.
- Four 10-hour days may be worked at straight time, Monday through Thursday or Tuesday through Friday.

RECOGNIZED HOLIDAYS: New Year's Day, Memorial Day, July 4th, Labor Day, Presidential Election Day, Veterans' Day, Thanksgiving Day, Christmas Day. Sunday holidays observed the following Monday.

NEW JERSEY DEPARTMENT OF LABOR AND WORKFORCE DEVELOPMENT

PREVAILING WAGE RATE DETERMINATION

County - MERCER

Craft: Electrician - Teledata (15 Instruments and Less) **PREVAILING WAGE RATE**

	01/01/19
Assistant General Foreman	W49.19 B31.29 T80.48
Foreman	W44.86 B28.58 T73.44
General Foreman	W51.16 B32.52 T83.68
Journeyman Technician	W39.35 B25.14 T64.49
Lead Foreman	W46.83 B29.81 T76.64
Working Foreman	W42.89 B27.35 T70.24

Craft: Electrician - Teledata (15 Instruments and Less) **APPRENTICE RATE SCHEDULE**

INTERVAL	PERIOD AND RATES									
Yearly	19.28	22.82	28.73	33.84						
Benefits	62.48% of	Apprentic e	Wage	Rate	+ $0.56					

Ratio of Apprentices to Journeymen - 1:4

Craft: Electrician - Teledata (15 Instruments and Less) **COMMENTS/NOTES**

NOTE: These rates are for service, maintenance, moves and/or changes affecting 15 instruments or less. These rates may NOT be used for any new construction or any fiber optic work.

FOREMAN REQUIREMENTS:
1 to 10 workers- 1 Working Foreman
11 to 20 workers- 1 Working Foreman and 1 Foreman
21 to 30 workers- 1 Working Foreman, 1 Foreman and 1 Lead Foreman
31 to 40 workers- 1 Working Foreman, 2 Foremen and 1 General Foreman
41 to 50 workers- 1 Working Foreman, 4 Foremen, 1 Assistant General Foreman and 1 General Foreman
51 to 60 workers- 1 Working Foreman, 5 Foremen, 1 Assistant General Foreman and 1 General Foreman
61 to 70 workers- 1 Working Foreman, 6 Foremen, 1 Assistant General Foreman and 1 General Foreman
71 to 80 workers- 1 Working Foreman, 7 Foremen, 2 Assistant General Foremen and 1 General Foreman
81 to 90 workers- 1 Working Foreman, 8 Foremen, 2 Assistant General Foremen and 1 General Foreman

91 to 100 workers- 1 Working Foreman, 9 Foremen, 2 Assistant General Foremen and 1 General Foreman.

HEIGHT WORK (40 feet above ground or floor):
Workers shall be paid an additional 10% of the regular rate, inclusive of benefits.

The regular workday shall be 8 hours, between 8:00 AM and 4:30 PM.

SHIFT DIFFERENTIAL:
- Shift work must run for a minimum of 5 workdays.
- 2nd Shift (4:30 PM-12:30 AM) shall receive 8 hours pay for 7.5 hours of work, plus an additional 10% of the hourly rate, per hour, inclusive of benefits.
- 3rd Shift: (12:30 AM-8:00 AM) shall receive 8 hours pay for 7 hours of work, plus an additional 15% of the hourly rate, per hour, inclusive of benefits.

OVERTIME:
Hours in excess of 8 per day, or outside the regular workday, Monday through Friday, and all hours on Saturdays shall be paid at time and one-half the regular rate, inclusive of benefits. All hours on Sundays and holidays shall be paid at double the regular rate, inclusive of benefits.

RECOGNIZED HOLIDAYS: New Year's Day, Memorial Day, July 4th, Labor Day, Presidential Election Day, Veterans' Day, Thanksgiving Day, Christmas Day. Sunday holidays observed the following Monday.

NEW JERSEY DEPARTMENT OF LABOR AND WORKFORCE DEVELOPMENT

PREVAILING WAGE RATE DETERMINATION

County - MERCER

Craft: Electrician - Teledata (16 Instruments & More) **PREVAILING WAGE RATE**

	04/01/19	07/06/20	10/04/21
Assistant General Foreman	W59.00 B37.42 T96.42	W0.00 B0.00 T98.42	W0.00 B0.00 T100.42
Foreman	W56.40 B35.79 T92.19	W0.00 B0.00 T94.19	W0.00 B0.00 T96.19
General Foreman	W64.10 B40.60 T104.70	W0.00 B0.00 T106.70	W0.00 B0.00 T108.70
Journeyman Technician	W51.27 B32.59 T83.86	W0.00 B0.00 T85.86	W0.00 B0.00 T87.86
Lead Foreman	W56.40 B35.79 T92.19	W0.00 B0.00 T94.19	W0.00 B0.00 T96.19
Working Foreman	W56.40 B35.79 T92.19	W0.00 B0.00 T94.19	W0.00 B0.00 T96.19

Craft: Electrician - Teledata (16 Instruments & More) **APPRENTICE RATE SCHEDULE**

INTERVAL	PERIOD AND RATES									
Yearly	15.06	17.57	20.08	25.10	35.14					
Benefits	62.48% of	Apprentic e	Wage	Rate	+ $0.31					

Ratio of Apprentices to Journeymen - 1:4

Craft: Electrician - Teledata (16 Instruments & More) **COMMENTS/NOTES**

APPRENTICE RATE SCHEDULE AS OF 4-1-19:

INTERVAL	PERIOD AND RATES
Yearly	15.38 17.94 20.51 25.64 35.89
Benefits	62.48% of Apprentice Wage Rate + $0.56

NOTES:

1) These rates are for service, maintenance, moves and/or changes affecting 16 or more instruments, and fiber optic work. These rates may NOT be used for any new construction.

2) The number of electricians on the jobsite is the determining factor for which Foreman Category applies.

FOREMAN REQUIREMENTS:

1 to 10 workers- 1 Working Foreman
11 to 20 workers- 1 Working Foreman and 1 Foreman
21 to 30 workers- 1 Working Foreman, 1 Foreman and 1 Lead Foreman
31 to 40 workers- 1 Working Foreman, 2 Foremen and 1 General Foreman
41 to 50 workers- 1 Working Foreman, 4 Foremen, 1 Assistant General Foreman and 1 General Foreman
51 to 60 workers- 1 Working Foreman, 5 Foremen, 1 Assistant General Foreman and 1 General Foreman
61 to 70 workers- 1 Working Foreman, 6 Foremen, 1 Assistant General Foreman and 1 General Foreman
71 to 80 workers- 1 Working Foreman, 7 Foremen, 2 Assistant General Foremen and 1 General Foreman
81 to 90 workers- 1 Working Foreman, 8 Foremen, 2 Assistant General Foremen and 1 General Foreman
91 to 100 workers- 1 Working Foreman, 9 Foremen, 2 Assistant General Foremen and 1 General Foreman.

HEIGHT WORK (40 feet above ground or floor):
Workers shall be paid an additional 10% of the regular rate, inclusive of benefits.

The regular workday shall be 8 hours, between 8:00 AM and 4:30 PM.

SHIFT DIFFERENTIAL:
- Shift work must run for a minimum of 5 workdays.
- 2nd Shift (4:30 PM-12:30 AM) shall receive 8 hours pay for 7.5 hours of work, plus an additional 10% of the hourly rate, per hour, inclusive of benefits.
- 3rd Shift: (12:30 AM-8:00 AM) shall receive 8 hours pay for 7 hours of work, plus an additional 15% of the hourly rate, per hour, inclusive of benefits.

OVERTIME:
Hours in excess of 8 per day, or outside the regular workday, Monday through Friday, and all hours on Saturdays shall be paid at time and one-half the regular rate, inclusive of benefits. All hours on Sundays and holidays shall be paid at double the regular rate, inclusive of benefits.

RECOGNIZED HOLIDAYS: New Year's Day, Memorial Day, July 4th, Labor Day, Presidential Election Day, Veterans' Day, Thanksgiving Day, Christmas Day. Sunday holidays observed the following Monday.

NEW JERSEY DEPARTMENT OF LABOR AND WORKFORCE DEVELOPMENT

PREVAILING WAGE RATE DETERMINATION

County - MERCER

Craft: Electrician- Outside Commercial **PREVAILING WAGE RATE**

	04/01/19	07/06/20	10/04/21
Assistant General Foreman	W59.00 B37.09 T96.09	W0.00 B0.00 T98.09	W0.00 B0.00 T100.09
Crane Operator, High Voltage Splicer, Welder	W53.83 B33.89 T87.72	W0.00 B0.00 T89.72	W0.00 B0.00 T91.72
Foreman	W56.40 B35.48 T91.88	W0.00 B0.00 T93.88	W0.00 B0.00 T95.88
General Foreman	W64.10 B40.25 T104.35	W0.00 B0.00 T106.35	W0.00 B0.00 T108.35
Groundman, Truck & Winch Operator- Level I	W15.38 B10.08 T25.46	W0.00 B0.00 T27.46	W0.00 B0.00 T29.46
Groundman, Truck & Winch Operator- Level II	W20.51 B13.26 T33.77	W0.00 B0.00 T35.77	W0.00 B0.00 T37.77
Groundman, Truck & Winch Operator- Level III	W25.64 B16.43 T42.07	W0.00 B0.00 T44.07	W0.00 B0.00 T46.07
Groundman, Truck & Winch Operator- Level IV	W33.33 B21.20 T54.53	W0.00 B0.00 T56.33	W0.00 B0.00 T58.33
Groundman, Truck & Winch Operator- Level V	W41.02 B25.96 T66.98	W0.00 B0.00 T68.98	W0.00 B0.00 T70.98
Heavy Equipment Operator	W51.27 B32.31 T83.58	W0.00 B0.00 T85.58	W0.00 B0.00 T87.58
Journeyman Lineman	W51.27 B32.31 T83.58	W0.00 B0.00 T85.58	W0.00 B0.00 T87.58

NEW JERSEY DEPARTMENT OF LABOR AND WORKFORCE DEVELOPMENT

PREVAILING WAGE RATE DETERMINATION

County - MERCER

Craft: Electrician- Outside Commercial **APPRENTICE RATE SCHEDULE**

INTERVAL	PERIOD AND RATES									
6 Months	30.12	32.63	35.14	37.65	40.16	42.67	45.18			
Benefits	61.93% of	Apprentic e	Wage	Rate	+ $0.31					

Craft: Electrician- Outside Commercial **COMMENTS/NOTES**

APPRENTICE RATE SCHEDULE AS OF 4-1-19:

INTERVAL	PERIOD AND RATES						
6 Months	30.76	33.33	35.89	38.45	40.02	43.58	46.14
Benefits	61.93% of Apprentice Wage Rate + $0.56						

* FOR UTILITY WORK PLEASE SEE STATEWIDE RATES

The regular workday is 8 hours between 7:00 AM and 4:30 pm.

SHIFT DIFFERENTIALS:
2nd Shift (4:30 PM to 12:30 AM): 8 hrs. pay for 7.5 hrs. work + an additional 10% of the regular rate, inclusive of benefits.

3rd Shift (12:30 AM to 8:00 AM): 8 hrs. pay for 7 hrs. work + an additional 15% of the regular rate per hour, inclusive benefits.

FOREMAN REQUIREMENTS:
When there are 2 or more electricians on the job, 1 shall be designated a Foreman.
1 additional Foreman shall be designated for every 10 additional electricians.
When there are 2 or more Foremen on the job, 1 shall be designated a General Foreman.
An Assistant General Foreman shall be designted for every 50 electricians working on the job.

OVERTIME:
The first 4 hours in excess of 8 per day, and hours before or after the regular workday that are not shift work, Monday through Friday, and the first 8 hours on Saturday shall be paid at time and one-half the regular rate, inclusive of benefits.

Four 10-hour days may be worked at straight time, Monday through Thursday or Tuesday through Friday.

RECOGNIZED HOLIDAYS:
New Year's Day, Presidents' Day, Memorial Day, July 4th, Labor Day, Presidential Election Day, Veterans' Day, Thanksgiving Day and Christmas Day. Sunday holidays will be observed the following Monday.

NEW JERSEY DEPARTMENT OF LABOR AND WORKFORCE DEVELOPMENT

PREVAILING WAGE RATE DETERMINATION

County - MERCER

Craft: Electrician-Utility Work (North) **PREVAILING WAGE RATE**

Rates are located in the "Statewide" rate package

Craft: Electrician-Utility Work (North) **APPRENTICE RATE SCHEDULE**

INTERVAL	PERIOD AND RATES									
* 6 Months	60%	65%	70%	75%	80%	85%	90%			
Benefits	67% of	Appren	tice	Wage	Rate	for all	intervals			

Craft: Electrician-Utility Work (North) **COMMENTS/NOTES**

Electrician-Utility Work (North) rates are located in the "Statewide" rate package.

* The apprentice wage rate is paid at the percentage of the Journeyman Lineman wage rate located in the "Statewide" rate package.

NEW JERSEY DEPARTMENT OF LABOR AND WORKFORCE DEVELOPMENT

PREVAILING WAGE RATE DETERMINATION

County - MERCER

Craft: Electrician-Utility Work (South) **PREVAILING WAGE RATE**

Rates are located in the "Statewide" rate package

Craft: Electrician-Utility Work (South) **APPRENTICE RATE SCHEDULE**

INTERVAL	PERIOD AND RATES									
6 Months	28.53	30.91	33.29	35.66	38.04	40.42	42.80			
Benefits	25.01	26.41	27.83	29.24	30.65	32.05	33.47			

Craft: Electrician-Utility Work (South) **COMMENTS/NOTES**

Electrician-Utility Work (South) rates are located in the "Statewide" rate package.

NEW JERSEY DEPARTMENT OF LABOR AND WORKFORCE DEVELOPMENT

PREVAILING WAGE RATE DETERMINATION

County - MERCER

Craft: Elevator Constructor **PREVAILING WAGE RATE**

	01/01/19
Helper-Over 5 Years	W40.28 B37.34 T77.62
Helper-Under 5 Years	W40.28 B36.53 T76.81
Mechanic (Journeyman) over 5 years	W57.55 B38.72 T96.27
Mechanic (Journeyman) under 5 years	W57.55 B37.57 T95.12
Mechanic in Charge (Foreman) over 5 years	W64.74 B39.29 T104.03
Mechanic in Charge (Foreman) under 5 years	W64.74 B38.00 T102.74
Probationary Helper (1st 6 months)	W28.78 B35.84 T64.62

Craft: Elevator Constructor **APPRENTICE RATE SCHEDULE**

INTERVAL	PERIOD AND RATES									
Yearly	55%	65%	70%	80%						
Benefits	full	journeyman	benefit	rate for	all	intervals				

Ratio of Apprentices to Journeymen - *

* Total number of helpers and apprentices shall not exceed the number of mechanics on the job , except where 2 teams are working, 1 additional helper or apprentice may be employed for first 2 teams and an extra helper or apprentice for each additional 3 teams. Further, the employer may use as many helpers or apprentices as needed, under the direction of a mechanic in wrecking old plants,handling and hoisting material, and on foundation work. When replacing cables on existing elevators, employer may use 2 helpers or apprentices to 1 mechanic.

Craft: Elevator Constructor **COMMENTS/NOTES**

SHIFT DIFFERENTIALS:

- 2nd Shift (4:30 PM to 12:30 AM) shall be established on the basis of 7.5 hours of work for 8 hours of pay, plus an additional 10% per hour.
- 3rd Shift (12:30 AM to 8:00 AM) shall be established on the basis of 7 hours of work for 8 hours of pay, plus an additional 15% per hour.

OVERTIME:
- Hours in excess of 8 per day, Monday through Friday, and all hours on Saturdays, Sundays, and holidays shall be paid at double the hourly rate.
- Four 10-hour days may be worked, Monday to Thursday or Tuesday to Friday, at straight time. When working a 4-10 hour day schedule, all hours worked on a day other than the days established for the 4-10 hour schedule shall be paid at double the hourly rate.

RECOGNIZED HOLIDAYS: New Year's Day, Memorial Day, July 4th, Labor Day, Veterans' Day, Thanksgiving Day and day after, Christmas Day. Saturday holidays observed the preceding Friday, Sunday holidays observed the following Monday.

NEW JERSEY DEPARTMENT OF LABOR AND WORKFORCE DEVELOPMENT

PREVAILING WAGE RATE DETERMINATION

County - MERCER

Craft: Glazier **PREVAILING WAGE RATE**

	05/01/19
* Leadman	W49.11 B25.06 T74.17
Foreman	W52.81 B23.62 T76.43
General Foreman	W54.81 B23.75 T78.56
Journeyman	W48.81 B23.36 T72.17

Craft: Glazier **APPRENTICE RATE SCHEDULE**

INTERVAL	PERIOD AND RATES									
6 Months	50%	55%		60%	65%		70%	75%		
Benefits	Intervals	1 to 2 =	9.11	Intervals	3 to 4 =	11.71	Intervals	5 to 6 =	13.20	

Ratio of Apprentices to Journeymen - 1:4

Craft: Glazier **COMMENTS/NOTES**

Hazard/Height Pay: +$1.00 per hour

* When there are three (3) men working on a jobsite for three (3) days or longer, 1 Journeyman may be designated as a Leadman for the duration of the job, provided he has his OSHA certification.

FOREMAN REQUIREMENTS:
- When there are 4 or more Glaziers on a job, 1 must be designated a Foreman.
- When there are 15 or more Glaziers on a job, 1 must be designated a General Foreman.

The regular workday shall consist of 8 hours, between 7:00 AM and 5:30 PM, Monday to Friday.

SHIFT DIFFERENTIALS:
- The second shift shall receive an additional 10% of the hourly rate, per hour, and the third shift shall receive an additional 15% of the hourly rate, per hour.
- When 3 shifts are worked, the second shift shall receive 8 hours pay for 7.5 hours of work, and the third shift shall receive 8 hours pay for 7 hours of work.

OVERTIME:
Hours in excess of 8 per day, or before or after the regular workday Monday through Friday, and all hours on Saturdays shall be paid at time and one-half the regular rate. All hours on Sundays and holidays shall be paid at double the regular

rate.

RECOGNIZED HOLIDAYS: New Year's Day, Memorial Day, July 4th, Labor Day, General Election Day, Veterans' Day, Thanksgiving Day, Christmas Day. Saturday holiday observed the preceding Friday. Sunday holiday observed the following Monday.

NEW JERSEY DEPARTMENT OF LABOR AND WORKFORCE DEVELOPMENT

PREVAILING WAGE RATE DETERMINATION

County - MERCER

Craft: Heat & Frost Insulator **PREVAILING WAGE RATE**

	07/01/18	07/01/19	07/01/20
Foreman	W44.97 B35.03 T80.00	W0.00 B0.00 T83.75	W0.00 B0.00 T87.00
Journeyman	W43.97 B35.03 T79.00	W0.00 B0.00 T82.25	W0.00 B0.00 T85.50

Craft: Heat & Frost Insulator **APPRENTICE RATE SCHEDULE**

INTERVAL	PERIOD AND RATES									
Yearly	45%	55%	65%	75%	80%					
Benefit	30.68	for	all	intervals						

Ratio of Apprentices to Journeymen - *

* Ratio = 1:4 on a "company-wide" basis (i.e. the total number of apprentices and journeymen employed by the company). There is no limit to the number of apprentices allowed on any one job, provided there is at least 1 journeyman on the job.

Craft: Heat & Frost Insulator **COMMENTS/NOTES**

APPRENTICE RATE SCHEDULE AS OF 7-1-18:

INTERVAL PERIOD AND RATES
Yearly 45% 55% 65% 75% 80%
Benefits 31.78 for all intervals

FOREMAN REQUIREMENTS:
- If there is only 1 Insulator on the job, he must be designated a Foreman.
- If there are 2 to 10 Insulators on the job, 1 must be designated a Foreman.
- If there are 11 or more Insulators on the job, 1 must be designated a General Foreman and receive the following additional pay (% above Journeyman wage rate):
  11 - 20 Insulators on site: 10%; 21 - 30 Insulators on site: 15%;
  31 - 40 Insulators on site: 20%; 41 - 50 Insulators on site: 25%

The regular workday shall be 8 hours between 7:00 AM and 3:30 PM.

SHIFT DIFFERENTIALS:
- Shift work must run for a minimum of two (2) consecutive days and a minimum of two (2) shifts per day must be worked. Additionally, no less than two (2) employees may work on any one (1) shift. If these requirements are not met then shift work would not apply and the applicable overtime rate shall be paid.
- 1st Shift (8:00 AM- 4:00 PM).
- 2nd Shift (4:00 PM - 12:00 AM): additional 15% of the regular rate, inclusive of benefits.
- 3rd Shift (12:00 AM - 8:00 AM): additional 20% of the regular rate, inclusive of benefits.

OVERTIME:
- Hours in excess of 8 per day, or before or after the regular workday Monday through Friday, that are not shift work, and all hours on Saturdays, shall be paid at time and one-half the regular rate, inclusive of benefits. All hours on Sundays and

holidays (except Labor Day) shall be paid at double the regular rate, inclusive of benefits. All hours on Labor Day shall be paid at triple the regular rate, inclusive of benefits.

RECOGNIZED HOLIDAYS: New Year's Day, Memorial Day, July 4th, Labor Day, Veterans' Day, Presidential Election Day, Thanksgiving Day, Christmas Day. Saturday holidays observed the preceding Friday, Sunday holidays observed the following Monday.

NEW JERSEY DEPARTMENT OF LABOR AND WORKFORCE DEVELOPMENT

PREVAILING WAGE RATE DETERMINATION

County - MERCER

Craft: Heat & Frost Insulator - Asbestos Worker **PREVAILING WAGE RATE**

	07/01/18	07/01/19	07/01/20
Foreman	W44.97 B35.03 T80.00	W0.00 B0.00 T83.75	W0.00 B0.00 T87.00
Journeyman	W43.97 B35.03 T79.00	W0.00 B0.00 T82.25	W0.00 B0.00 T85.50

Craft: Heat & Frost Insulator - Asbestos Worker **APPRENTICE RATE SCHEDULE**

INTERVAL	PERIOD AND RATES									
	SEE	Heat &	Frost	Insulator						

Craft: Heat & Frost Insulator - Asbestos Worker **COMMENTS/NOTES**

NOTE: These rates apply only to the REMOVAL of insulation materials/asbestos from mechanical systems, including containment erection and demolition, and placing material in appropriate containers.

FOREMAN REQUIREMENTS:
- If there is only 1 Asbestos Worker on the job, he must be designated an Abatement Foreman.
- If there are 2 to 10 Asbestos Workers on the job, 1 must be designated an Abatement Foreman.
- If there are 11 or more Asbestos Workers on the job, 1 must be designated a General Foreman and receive the following additional pay (% above Abatement Mechanic wage rate):

11 - 20 Insulators on site: 10%; 21 - 30 Insulators on site: 15%;
31 - 40 Insulators on site: 20%; 41 - 50 Insulators on site: 25%

MECHANIC-TO-APPRENTICE RATIO:
- Maximum of 5 Apprentices for each Abatement Mechanic on the job.

OVERTIME:
- Hours in excess of 8 per day, and all hours on Saturdays, shall be paid at time and one-half the regular rate, inclusive of benefits. All hours on Sundays and holidays (except Labor Day) shall be paid at double the regular rate, inclusive of benefits. All hours on Labor Day shall be paid at triple the regular rate, inclusive of benefits.

RECOGNIZED HOLIDAYS: New Year's Day, Memorial Day, July 4th, Labor Day, Veterans' Day, Presidential Election Day, Thanksgiving Day, Christmas Day. Saturday holidays observed the preceding Friday, Sunday holidays observed the following Monday.

NEW JERSEY DEPARTMENT OF LABOR AND WORKFORCE DEVELOPMENT

PREVAILING WAGE RATE DETERMINATION

County - MERCER

Craft: Ironworker **PREVAILING WAGE RATE**

	07/01/18
Foreman: Fence and Guardrail	W54.13 B30.24 T84.37
Foreman-Rod/Mesh	W54.13 B30.24 T84.37
Foreman-Structural	W56.29 B30.24 T86.53
Journeyman: Fence and Guardrail	W50.12 B30.24 T80.36
Journeyman-Rod/Mesh	W50.12 B30.24 T80.36
Journeyman-Structural	W52.12 B30.24 T82.36

Craft: Ironworker **APPRENTICE RATE SCHEDULE**

INTERVAL	PERIOD AND RATES									
Yearly	60%	75%	85%							

Ratio of Apprentices to Journeymen - *

* On all work EXCEPT Ornamental Iron and Bridge Cable Spinning Work 1:4; On Ornamental Iron and Bridge Cable Spinning Work 1:1.

Craft: Ironworker **COMMENTS/NOTES**

Note: For work on hazardous waste sites, workers shall receive an additional $3.00 per hour.

The regular workday shall consist of 8 hours between 7:00 AM and 5:00 PM.

SHIFT DIFFERENTIALS:
- Second shift shall receive an additional 10% per hour.
- Third shift shall receive an additional 15% per hour.

OVERTIME:
- Time and one-half the wage rate for hours in excess of 8 per day, or before or after the regular workday, Monday through Friday, and for all hours on Saturdays. Double the wage rate for all hours on Sundays and holidays.
- Employees may work four 10-hour days, Monday to Thursday, at straight time. Friday may be used as a make-up day

for a day lost to inclement weather. If Friday is not a make-up day, all hours worked on Friday shall be paid at time and one-half the wage rate.
- Benefits on overtime hours shall be paid at the following rates:
  When wages are time and one-half, benefits = $34.36.
  When wages are double, benefits = $38.48.

RECOGNIZED HOLIDAYS: New Year's Eve, New Year's Day, Memorial Day, July 4th, Labor Day, General and Presidential Election Day, Thanksgiving Day, Christmas Eve, Christmas Day. Saturday holidays observed the preceding Friday. Sunday holidays observed the following Monday.

NEW JERSEY DEPARTMENT OF LABOR AND WORKFORCE DEVELOPMENT

PREVAILING WAGE RATE DETERMINATION

County - MERCER

Craft: Laborer - Asbestos & Hazardous Waste Removal **PREVAILING WAGE RATE**

	08/01/18
Journeyman (Handler)	W31.48 B22.31 T53.79

Craft: Laborer - Asbestos & Hazardous Waste Removal **APPRENTICE RATE SCHEDULE**

INTERVAL	PERIOD AND RATES									
Yearly	18.89	22.04	25.18	28.33						
Benefit	20.66	for	all	intervals						

Ratio of Apprentices to Journeymen - *

* Ratio of apprentices to journeymen shall not be more than one apprentice for the first journeyman and no more than one (1) apprentice for each additional three (3) journeymen.

Craft: Laborer - Asbestos & Hazardous Waste Removal **COMMENTS/NOTES**

NOTE: These rates apply to work in connection with Asbestos, Radiation, Hazardous Waste, Lead, Chemical, Biological, Mold Remediation and Abatement.

The regular workday shall be 8 hours.

OVERTIME:
- Hours in excess of 8 per day, Monday through Saturday, and all hours on Sunday and holidays shall be paid at time and one-half the regular rate.
- Benefits on ALL overtime hours shall be paid at straight time.

RECOGNIZED HOLIDAYS: New Year's Day, President's Day, Good Friday, Easter, Memorial Day, July 4th, Labor Day, Presidential Election Day, Veterans' Day, Thanksgiving Day, Christmas Day. (Holidays start at 12:00 am).

NEW JERSEY DEPARTMENT OF LABOR AND WORKFORCE DEVELOPMENT

PREVAILING WAGE RATE DETERMINATION

County - MERCER

Craft: Laborer - Building **PREVAILING WAGE RATE**

	05/01/19	05/01/20
Class A Journeyman	W34.05 B29.52 T63.57	W0.00 B0.00 T64.87
Class B Journeyman	W33.55 B29.52 T63.07	W0.00 B0.00 T64.37
Class C Journeyman	W28.52 B29.52 T58.04	W0.00 B0.00 T59.34
Foreman	W38.31 B29.52 T67.83	W0.00 B0.00 T69.13
General Foreman	W42.56 B29.52 T72.08	W0.00 B0.00 T73.38

Craft: Laborer - Building **APPRENTICE RATE SCHEDULE**

INTERVAL	PERIOD AND RATES									
6 Months	60%	70%	80%	90%						
Benefit	26.27	26.27	26.27	26.27						

Ratio of Apprentices to Journeymen - *

* Ratio of apprentices to journeymen shall not be more than one apprentice for the first journeyman and no more than one (1) apprentice for each additional three (3) journeymen.

Craft: Laborer - Building **COMMENTS/NOTES**

CLASS A: Specialist laborer including mason tender or concrete pour crew; scaffold builder (scaffolds up to 14 feet in height); operator of forklifts, Bobcats (or equivalent machinery), jack hammers, tampers, motorized tampers and compactors, vibrators, street cleaning machines, hydro demolition equipment, riding motor buggies, conveyors, burners; and nozzlemen on gunite work.
CLASS B: Basic laborer - includes all laborer work not listed in Class A or Class C.
CLASS C: Janitorial-type light clean-up work associated with the TURNOVER of a project, or part of a project, to the owner. All other clean-up work is Class B.

The regular workday shall be 8 hours between 6:00 AM and 6:00 PM.

SHIFT DIFFERENTIALS:
- Shift work must run for a minimum of 5 consecutive workdays.
- When a 2-shift schedule is worked, including a day shift, both shifts shall be established on the basis of 8 hours pay for 8 hours worked. The second shift shall receive the regular rate plus an additional 10%.
- When a 3-shift schedule is worked, the day shift shall be established on the basis of 8 hours pay for 8 hours worked, the second shift shall be established on the basis of 8 hours pay for 7.5 hours worked, and the third shift shall be established

on the basis of 8 hours pay for 7 hours worked. The day shift shall receive the regular rate, the second shift shall receive the regular rate plus an additional 10%, and the third shift shall receive the regular rate plus an additional 15%.
- When a second or third shift is worked with no day shift, the second or third shift shall be established on the basis of 8 hours pay for 8 hours worked. The second shift shall receive the regular rate plus an additional 10%, and the third shift shall receive the regular rate plus an additional 15%.

OVERTIME:
- Hours in excess of 8 per day, or outside the regular workday that are not shift work, Monday through Friday, and all hours on Saturdays shall be paid at time and one-half the regular rate. Saturday may be used as a make-up day (paid at straight time) for a day lost to inclement weather, or for a holiday that is observed during the work week, Monday through Friday. All hours on Sundays and holidays shall be paid at double the regular rate.
- Four 10-hour days may be worked Monday to Thursday, at straight time, with Friday used a make-up day for a day lost to inclement weather. If Friday is not a make-up day, all hours on Friday shall be paid at time and one-half the regular rate.
- Benefits on ALL overtime hours shall be paid at time and one-half.

RECOGNIZED HOLIDAYS: New Year's Day, Presidents' Day, Memorial Day, July 4th, Labor Day, Presidential Election Day, Veterans' Day, Thanksgiving Day, Christmas Day. Sunday holidays observed the following Monday.

NEW JERSEY DEPARTMENT OF LABOR AND WORKFORCE DEVELOPMENT

PREVAILING WAGE RATE DETERMINATION

County - MERCER

Craft: Laborer - Heavy & General **PREVAILING WAGE RATE**

Rates are located in the
"Statewide" rate package

Craft: Laborer - Heavy & General **APPRENTICE RATE SCHEDULE**

INTERVAL	PERIOD AND RATES									
1000 Hours	60%	70%	80%	90%						
Benefit	20.28	for	all	intervals						

Ratio of Apprentices to Journeymen - *

* No more than 1 apprentice for the first journeyman and no more than 1 apprentice for each additional 3 journeymen.

Craft: Laborer - Heavy & General COMMENTS/NOTES

As of 3-1-19, benefits shall be $21.03.
As of 3-1-20, benefits shall be $21.78.

Heavy & General Laborer rates are located in the "Statewide" rate package.

NEW JERSEY DEPARTMENT OF LABOR AND WORKFORCE DEVELOPMENT

PREVAILING WAGE RATE DETERMINATION

County - MERCER

Craft: Laborer-Residential and Modular Construction **PREVAILING WAGE RATE**

	05/03/19	04/01/20
* Skilled Tradesman (only applies to Modular Construction)	W26.20 B5.45 T31.65	W26.55 B5.45 T32.00
Foreman (person directing crew, regardless of his skill classification)	W30.20 B5.45 T35.65	W30.55 B5.45 T36.00
Laborer	W22.20 B5.45 T27.65	W22.55 B5.45 T28.00
Laborer (for single family and stand-alone duplex owned by single owner)	W16.70 B2.95 T19.65	W17.05 B2.95 T20.00

Craft: Laborer-Residential and Modular Construction **APPRENTICE RATE SCHEDULE**

INTERVAL	PERIOD AND RATES									
As shown	800 hours	600 hours	600 hours							
wage & benefits	70%	80%	90%							

Ratio of Apprentices to Journeymen-

One (1) apprentice shall be allowed for the first journeyman on site and no more than one (1) additional apprentice for each additional three (3) journeymen on site.

Craft: Laborer-Residential and Modular Construction **COMMENTS/NOTES**

* SKILLED TRADESMAN-
any worker doing work not typically done by a Building Laborer. Some examples are installing interior doors, sheet rock, hooking up appliances, installing light fixtures, installing railing systems, etc. Please note where local building codes require that certain work be performed under the supervision of a licensed tradesman (i.e. Plumber, Electrician, etc.) Laborers shall work under such supervision.

RESIDENTIAL CONSTRUCTION- All residential construction (not commercial), single-family, stand-alone duplex houses, townhouses and multi-family buildings of not more than four (4) floors. Each housing unit must be fully and independently functional; each housing unit must have its own kitchen and bathroom. The definition includes all incidental items such as site work, parking areas, utilities, streets and sidewalks. Please note the construction must be Residential in nature. A First Floor at or below grade may contain commercial space not to exceed 50% square footage of the floor; at least 50% of the First Floor must contain living accommodations or related nonresidential uses (e.g. laundry space, recreation/hobby rooms, and/or corridor space). Basement stories below grade used for storage, parking, mechanical systems/equipment, etc., are considered basement stories which are not used in determining the building's height. An attic is an unfinished space located immediately below the roof. Such space is not used in determining a building's height even if used for storage purposes. In addition, barracks and dormitories are not considered residential projects.

MODULAR RESIDENTIAL CONSTRUCTION- all aspects of modular residential construction (not commercial) at the site of installation of structures of no more than four (4) stories, including all excavation and site preparation, footings and

foundation systems whether poured on-site or prefabricated, all underground waterproofing, underground utilities, concrete slabs, sidewalks, driveways, paving, hardscape and landscaping. Please note the construction must be Residential as defined above. All work performed by the Set Crew (the crew of workers who set the modular boxes on the foundation), including the rigging, setting, attaching and assembly of all modules and structural members, preparation of the foundation to accept modules, such as sill plates, connection of all in-module and under-module connections including, but not limited to, plumbing, electrical, HVAC, fire suppression, CATS, telephone, television/internet, and fiber optic, the building or installation of any porches or decks regardless of material or method of construction, the on-site installation of, or completion of any roof system, doors, windows and fenestrations, including flashing, gutter and soffit systems, waterproofing, insulation and interior and exterior trim work, and painting. Please note that modular construction does not include on-site stick built construction, tip up construction or panel built construction.

The regular workday shall be 8 hours between 6:00 AM and 6:00 PM.

OVERTIME:
Hours worked in excess of 8 per day/40 per week, Monday through Saturday, and all hours worked on Sunday and holidays shall be paid at time and one-half the hourly rate.

RECOGNIZED HOILDAYS:
New Year's Day, Martin Luther King Day, Memorial Day, July 4th, Labor Day, Thanksgiving Day and Christmas Day.

NEW JERSEY DEPARTMENT OF LABOR AND WORKFORCE DEVELOPMENT

PREVAILING WAGE RATE DETERMINATION

County - MERCER

Craft: Millwright **PREVAILING WAGE RATE**

	05/01/19
Foreman	W58.26 B34.39 T92.65
Journeyman	W50.66 B29.99 T80.65

Craft: Millwright **APPRENTICE RATE SCHEDULE**

INTERVAL	PERIOD AND RATES									
6 Months	40%	45%	50%	55%	60%	65%	70%	75%	85%	95%
Benefits	58% of	Appren	tice	Wage	Rate	for all	intervals	+ $.60		

Ratio of Apprentices to Journeymen - 1:3

Craft: Millwright **COMMENTS/NOTES**

FOREMAN REQUIREMENTS:
- When there are 2 or more Millwrights on a job, 1 shall be designated as a Foreman.
- When there are 21 or more Millwrights on a job, 2 shall be designated as Foremen.

The regular workday shall consist of 8 hours, starting between 7:00 AM and 9:00 AM.

SHIFT DIFFERENTIALS:
- When a 2 shift schedule (including a day shift) is established, the day shift shall be established on an 8 hour basis. The second shift shall be established on an 8 hour basis, and receive the regular rate plus 15%, inclusive of benefits.
- When a three shift schedule is established, the first shift shall be established on an 8 hour basis, the second shift on a 7.5 hour basis, and the third shift on a 7 hour basis. The first shift shall receive the regular hourly rate, the second shift shall receive the regular rate plus 15% and the third shift shall receive the regular rate plus 20%, inclusive of benefits.
- When there is no day shift, and a second or third shift is established, it shall be established on an 8 hour basis. The second shift shall receive the regular rate plus 15% and the third shift shall receive the regular rate plus 20%, inclusive of benefits.

OVERTIME:
- All hours in excess of 8 per day, or before or after an established shift that are not shift work, and all hours on Saturdays shall be paid at time and one-half the hourly rate, inclusive of benefits. All hours on Sundays and holidays shall be paid at double the hourly rate, inclusive of benefits.
- Four 10-hour days may be worked, Monday to Thursday, at straight time. Friday may be used as a make-up day for a day lost due to inclement weather. If Friday is not a make-up day, all hours on Friday shall be paid at time and one-half the hourly rate, inclusive of benefits.

RECOGNIZED HOLIDAYS: New Year's Day, Presidents' Day, Memorial Day, July 4th, Labor Day, Presidential Election Day, Veterans' Day, Thanksgiving Day, Christmas Day. Sunday holidays will be observed the following Monday.

NEW JERSEY DEPARTMENT OF LABOR AND WORKFORCE DEVELOPMENT

PREVAILING WAGE RATE DETERMINATION

County - MERCER

Craft: Operating Engineer **PREVAILING WAGE RATE**

Rates are located in the
"Statewide" rate package

Craft: Operating Engineer **APPRENTICE RATE SCHEDULE**

INTERVAL	PERIOD AND RATES									
Yearly	60%	70%	80%	90%						

Ratio of Apprentices to Journeymen - *

* 1 apprentice for each piece of heavy equipment. At least 10 pieces of heavy equipment or a minimum of 5 Operating Engineers must be on site.

Craft: Operating Engineer **COMMENTS/NOTES**

Operating Engineer rates are located in the "Statewide" rate package.

NEW JERSEY DEPARTMENT OF LABOR AND WORKFORCE DEVELOPMENT

PREVAILING WAGE RATE DETERMINATION

County - MERCER

Craft: Operating Engineer - Field Engineer **PREVAILING WAGE RATE**

Rates are located in the
"Statewide" rate package

Craft: Operating Engineer - Field Engineer **APPRENTICE RATE SCHEDULE**

INTERVAL	PERIOD AND RATES									
Yearly	70%	75%	of Rod/	Chainman	Wage					
Yearly			80%	90%	Transit/	Instrument	man	Wage		

Ratio of Apprentices to Journeymen - *

* No more than 1 Field Engineer Apprentice per Survey Crew.

Craft: Operating Engineer - Field Engineer **COMMENTS/NOTES**

Operating Engineer - Field Engineer rates are located in the "Statewide" rate package.

NEW JERSEY DEPARTMENT OF LABOR AND WORKFORCE DEVELOPMENT

PREVAILING WAGE RATE DETERMINATION

County - MERCER

Craft: Painter - Bridges **PREVAILING WAGE RATE**

	05/03/19
Foreman	W59.81 B28.74 T88.55
General Foreman	W61.81 B28.74 T90.55
Journeyman	W54.81 B28.74 T83.55

Craft: Painter - Bridges **APPRENTICE RATE SCHEDULE**

INTERVAL	PERIOD AND RATES									
6 Months	40%	50%			60%	70%		80%	90%	
Benefits	Intervals	1 to 2 =	10.00	Intervals	3 to 4 =	12.27	Intervals	5 to 6 =	15.28	

Ratio of Apprentices to Journeymen - 1:4

Craft: Painter - Bridges **COMMENTS/NOTES**

These rates apply to: All bridges that span waterways, roadways, railways and canyons. All tunnels, overpasses, viaducts and all appurtenances.

FOREMEN REQUIREMENTS:
- When there are 4 or more Painters on a job, 1 shall be designated a Foreman.
- When there are 15 or more Painters on a job, 1 shall be designated a General Foreman.

The regular workday shall consist of 8 hours between 7:00 AM and 5:30 PM.

SHIFT DIFFERENTIALS:
- The second shift shall receive an additional 10% of the hourly rate, per hour, and the third shift shall receive an additional 15% of the hourly rate, per hour.

OVERTIME:
- Hours in excess of 8 per day, Monday through Friday, and all hours on Saturdays and Sundays shall be paid at time and one-half the regular rate. All hours on holidays shall be paid at double the regular rate.
- Saturday or Sunday may be used to make up a day lost to inclement weather, at straight time.
- Four 10-hour days may be worked, at straight time, Monday through Friday.

RECOGNIZED HOLIDAYS: New Year's Day, President's Day, Memorial Day, July 4th, Labor Day, Presidential Election Day, Veterans' Day, Thanksgiving Day, Christmas Day. Saturday holiday observed the preceding Friday. Sunday holiday observed the following Monday.

NEW JERSEY DEPARTMENT OF LABOR AND WORKFORCE DEVELOPMENT

PREVAILING WAGE RATE DETERMINATION

County - MERCER

Craft: Painter - Line Striping **PREVAILING WAGE RATE**

	05/03/19
Apprentice (1st year)	W26.44 B11.65 T38.09
Apprentice (2nd year)	W30.44 B19.16 T49.60
Foreman (Charge Person)	W39.09 B19.94 T59.03
Journeyman 1 (at least 1 year of working exp. as a journeyman)	W34.32 B19.94 T54.26
Journeyman 2 (at least 2 years of working exp. as a journeyman)	W38.09 B19.94 T58.03

Craft: Painter - Line Striping **COMMENTS/NOTES**

OVERTIME:
Hours in excess of 8 per day, Monday through Saturday, and all hours on Sundays and holidays shall be paid at time and one-half the hourly rate.

RECOGNIZED HOLIDAYS: New Year's Day, Presidents' Day, Memorial Day, July 4th, Labor Day, Veterans Day, Thanksgiving Day and Christmas Day. Veterans Day may be substituted for the day after Thanksgiving.

NEW JERSEY DEPARTMENT OF LABOR AND WORKFORCE DEVELOPMENT

PREVAILING WAGE RATE DETERMINATION

County - MERCER

Craft: Painter - New Construction **PREVAILING WAGE RATE**

	05/01/19	05/01/20
Foreman	W45.45 B24.35 T69.80	W47.45 B24.35 T71.80
General Foreman	W49.43 B24.67 T74.10	W51.43 B24.67 T76.10
Journeyman	W41.47 B24.04 T65.51	W43.47 B24.04 T67.51

Craft: Painter - New Construction **APPRENTICE RATE SCHEDULE**

INTERVAL	PERIOD AND RATES									
6 Months	40%	45%	55%	65%	70%	75%	80%	80%		
Benefits	8.05	8.05	10.05	10.05	11.05	11.05	14.05	14.05		

Ratio of Apprentices to Journeymen - 1:4

Craft: Painter - New Construction **COMMENTS/NOTES**

Spraying, sandblasting, lead abatement, work on tanks or stacks, work performed above 3 stories or 30 feet in height, or using swing scaffolds requires an additional 10% of the wage rate.

FOREMEN REQUIREMENTS:
- When there are 4 or more Painters on a job, 1 shall be designated a Foreman.
- When there are 15 or more Painters on a job, 1 shall be designated a General Foreman.

The regular workday shall consist of 8 hours between 7:00 AM and 5:30 PM.

SHIFT DIFFERENTIALS:
- The second shift shall receive an additional 10% of the hourly rate, per hour, and the third shift shall receive an additional 15% of the hourly rate, per hour.

OVERTIME:
- Hours in excess of 8 per day, or before or after the regular workday, Monday through Friday, and all hours on Saturdays shall be paid at time and one-half the regular rate. All hours on Sundays and holidays shall be paid at double the regular rate.
- Saturday or Sunday may be used to make up a day lost to inclement weather, at straight time.
- Four 10-hour days may be worked, at straight time, Monday through Friday.

RECOGNIZED HOLIDAYS: New Year's Day, President's Day, Memorial Day, July 4th, Labor Day, General Election Day, Veterans' Day, Thanksgiving Day, Christmas Day.

NEW JERSEY DEPARTMENT OF LABOR AND WORKFORCE DEVELOPMENT

PREVAILING WAGE RATE DETERMINATION

County - MERCER

Craft: Painter - Repainting **PREVAILING WAGE RATE**

	05/01/19	05/01/20
Foreman	W33.07 B19.95 T53.02	W33.92 B19.95 T53.87
General Foreman	W36.00 B20.10 T56.10	W36.85 B20.10 T56.95
Journeyman	W30.14 B19.77 T49.91	W30.99 B19.77 T50.76

Craft: Painter - Repainting **APPRENTICE RATE SCHEDULE**

INTERVAL	PERIOD AND RATES									
	SEE	PAINTER	NEW	CONSTR UC	TION					

Ratio of Apprentices to Journeymen - 1:4

Craft: Painter - Repainting **COMMENTS/NOTES**

NOTE: These rates may only be used on jobs where no major alterations (only doing painting and carpeting with nothing else being changed in the office or on the project) occur, and where not more than 3 other trades are present on the job, but may NOT, under any circumstances, be used for work on bridges, stacks, elevated tank, or generating stations.

Spraying, sandblasting, lead abatement, work on tanks or stacks, work performed above 3 stories or 30 feet in height, or using swing scaffolds requires an additional 10% of the wage rate.

FOREMEN REQUIREMENTS:
- When there are 4 or more Painters on a job, 1 shall be designated a Foreman.
- When there are 15 or more Painters on a job, 1 shall be designated a General Foreman.

OVERTIME:
- Hours in excess of 8 per day and 40 per week shall be paid at time and one-half the regular rate. All hours on Sundays and holidays shall be paid at double the regular rate.
- Four 10-hour days may be worked, at straight time, Monday through Sunday.

RECOGNIZED HOLIDAYS: New Year's Day, President's Day, Memorial Day, July 4th, Labor Day, General Election Day, Veterans' Day, Thanksgiving Day, Christmas Day.

NEW JERSEY DEPARTMENT OF LABOR AND WORKFORCE DEVELOPMENT

PREVAILING WAGE RATE DETERMINATION

County - MERCER

Craft: Painter- Containment **PREVAILING WAGE RATE**

	05/04/17
Journeyman	W35.18 B24.75 T59.93

Craft: Painter- Containment **COMMENTS/NOTES**

NOTE: These rates shall require no painting, but used in a supporting capacity only, such as wrapping, boxing, fencing, etc. on tanks.

The regular workday shall consist of 8 hours between 7:00 AM and 5:30 PM.

SHIFT DIFFERENTIALS:
- The second shift shall receive an additional 10% of the hourly rate, per hour, and the third shift shall receive an additional 15% of the hourly rate, per hour.

OVERTIME:
- Hours in excess of 8 per day, Monday through Friday, and all hours on Saturdays and Sundays shall be paid at time and one-half the regular rate. All hours on holidays shall be paid at double the regular rate..
- Four 10-hour days may be worked, at straight time, Monday through Friday.

RECOGNIZED HOLIDAYS: New Year's Day President's Day, Memorial Day, July 4th, Labor Day, Presidential Election Day, Veterans' Day, Thanksgiving Day, Christmas Day. Saturday holiday observed the preceding Friday. Sunday holiday observed the following Monday.

NEW JERSEY DEPARTMENT OF LABOR AND WORKFORCE DEVELOPMENT

PREVAILING WAGE RATE DETERMINATION

County - MERCER

Craft: Painter-Elevated Water Tanks **PREVAILING WAGE RATE**

	05/04/17
Foreman	W48.92 B24.92 T73.84
General Foreman	W50.92 B24.92 T75.84
Journeyman	W43.92 B24.92 T68.84

Craft: Painter-Elevated Water Tanks **APPRENTICE RATE SCHEDULE**

INTERVAL	PERIOD AND RATES									
	SEE	PAINTER	BRIDGES							

Craft: Painter-Elevated Water Tanks **COMMENTS/NOTES**

These rates apply to: All new and repaint elevated water tanks (interior and exterior).

FOREMEN REQUIREMENTS:
- When there are 4 or more Painters on a job, 1 shall be designated a Foreman.
- When there are 15 or more Painters on a job, 1 shall be designated a General Foreman.

The regular workday shall consist of 8 hours between 7:00 AM and 5:30 PM.

SHIFT DIFFERENTIALS:
- The second shift shall receive an additional 10% of the hourly rate, per hour, and the third shift shall receive an additional 15% of the hourly rate, per hour.

OVERTIME:
- Hours in excess of 8 per day, Monday through Friday, and all hours on Saturdays and Sundays shall be paid at time and one-half the regular rate. All hours on holidays shall be paid at double the regular rate.
- Saturday or Sunday may be used to make up a day lost to inclement weather, at straight time.
- Four 10-hour days may be worked, at straight time, Monday through Friday.

RECOGNIZED HOLIDAYS: New Year's Day, President's Day, Memorial Day, July 4th, Labor Day, Presidential Election Day, Veterans' Day, Thanksgiving Day, Christmas Day. Saturday holiday observed the preceding Friday. Sunday holiday observed the following Monday.

NEW JERSEY DEPARTMENT OF LABOR AND WORKFORCE DEVELOPMENT

PREVAILING WAGE RATE DETERMINATION

County - MERCER

Craft: Painter-Structural Steel **PREVAILING WAGE RATE**

	05/04/17
Foreman	W47.87 B25.27 T73.14
General Foreman	W49.87 B25.27 T75.14
Journeyman	W42.87 B25.27 T68.14

Craft: Painter-Structural Steel **APPRENTICE RATE SCHEDULE**

INTERVAL	PERIOD AND RATES									
	SEE	PAINTER	BRIDGES							

Craft: Painter-Structural Steel **COMMENTS/NOTES**

These rates apply to: All work in power plants (any aspect). On steeples, on dams, on hangers, transformers, substations, etc. and on open steel, whether new or repaint. All new work (excluding traditional commercial painting work) in refineries, tank farms, water/sewerage treatment facilities and on pipelines.

FOREMEN REQUIREMENTS:
- When there are 4 or more Painters on a job, 1 shall be designated a Foreman.
- When there are 15 or more Painters on a job, 1 shall be designated a General Foreman.

The regular workday shall consist of 8 hours between 7:00 AM and 5:30 PM.

SHIFT DIFFERENTIALS:
- The second shift shall receive an additional 10% of the hourly rate, per hour, and the third shift shall receive an additional 15% of the hourly rate, per hour.

OVERTIME:
- Hours in excess of 8 per day, Monday through Friday, and all hours on Saturdays and Sundays shall be paid at time and one-half the regular rate. All hours on holidays shall be paid at double the regular rate.
- Saturday or Sunday may be used to make up a day lost to inclement weather, at straight time.
- Four 10-hour days may be worked, at straight time, Monday through Friday.

RECOGNIZED HOLIDAYS: New Year's Day, President's Day, Memorial Day, July 4th, Labor Day, Presidential Election Day, Veterans' Day, Thanksgiving Day, Christmas Day. Saturday holiday observed the preceding Friday. Sunday holiday observed the following Monday.

NEW JERSEY DEPARTMENT OF LABOR AND WORKFORCE DEVELOPMENT

PREVAILING WAGE RATE DETERMINATION

County - MERCER

Craft: Paperhanger - New Construction **PREVAILING WAGE RATE**

	05/01/19	05/01/20
Foreman	W46.75 B24.11 T70.86	W47.68 B24.11 T71.79
Journeyman	W41.68 B24.11 T65.79	W42.61 B24.11 T66.72

Craft: Paperhanger - New Construction **APPRENTICE RATE SCHEDULE**

INTERVAL	PERIOD AND RATES									
	SEE	PAINTER	NEW	CONSTR UC	TION					

Ratio of Apprentices to Journeymen - 1:4

Craft: Paperhanger - New Construction **COMMENTS/NOTES**

FOREMEN REQUIREMENTS:
- When there are 4 or more Paperhangers on a job, 1 shall be designated a Foreman.

The regular workday shall consist of 8 hours between 7:00 AM and 5:30 PM.

SHIFT DIFFERENTIALS:
- The second shift shall receive an additional 10% of the hourly rate, per hour, and the third shift shall receive an additional 15% of the hourly rate, per hour.

OVERTIME:
- Hours in excess of 8 per day, Monday through Friday, and all hours on Saturdays shall be paid at time and one-half the regular rate. All hours on Sundays and holidays shall be paid at double the regular rate.
- Saturday or Sunday may be used to make up a day lost to inclement weather, at straight time.
- Four 10-hour days may be worked, at straight time, Monday through Friday.

RECOGNIZED HOLIDAYS: New Year's Day, President's Day, Memorial Day, July 4th, Labor Day, General Election Day, Veterans' Day, Thanksgiving Day, Christmas Day.

NEW JERSEY DEPARTMENT OF LABOR AND WORKFORCE DEVELOPMENT

PREVAILING WAGE RATE DETERMINATION

County - MERCER

Craft: Paperhanger - Renovation **PREVAILING WAGE RATE**

	05/01/19	05/01/20
Foreman	W34.13 B19.81 T53.94	W35.15 B19.81 T54.96
Journeyman	W31.03 B19.81 T50.84	W31.96 B19.81 T51.77

Craft: Paperhanger - Renovation **APPRENTICE RATE SCHEDULE**

INTERVAL	PERIOD AND RATES									
		SEE	PAINTER	NEW	CONSTR UC	TION				

Ratio of Apprentices to Journeymen - 1:4

Craft: Paperhanger - Renovation **COMMENTS/NOTES**

NOTE: These rates may only be used on jobs where no major alterations occur, and where not more than 3 other trades are present on the job, but may NOT, under any circumstances, be used for work on bridges, stacks, elevated tanks, or generating stations.

FOREMEN REQUIREMENTS:
- When there are 4 or more Paperhangers on a job, 1 shall be designated a Foreman.

OVERTIME:
- Hours in excess of 8 per day and 40 per week shall be paid at time and one-half the regular rate.
- Four 10-hour days may be worked, at straight time, Monday through Sunday.

NEW JERSEY DEPARTMENT OF LABOR AND WORKFORCE DEVELOPMENT

PREVAILING WAGE RATE DETERMINATION

County - MERCER

Craft: Pipefitter **PREVAILING WAGE RATE**

Craft: Pipefitter **COMMENTS/NOTES**

See PLUMBERS Rates

NEW JERSEY DEPARTMENT OF LABOR AND WORKFORCE DEVELOPMENT
PREVAILING WAGE RATE DETERMINATION

County - MERCER

Craft: Plasterer **PREVAILING WAGE RATE**

See "Cement Mason" Rates

Craft: Plasterer **COMMENTS/NOTES**

See CEMENT MASON Rates

NEW JERSEY DEPARTMENT OF LABOR AND WORKFORCE DEVELOPMENT

PREVAILING WAGE RATE DETERMINATION

County - MERCER

Craft: Plumber **PREVAILING WAGE RATE**

	07/01/18	07/01/19
Assistant General Foreman	W53.13 B38.88 T92.01	W0.00 B0.00 T94.13
Foreman	W52.64 B38.88 T91.52	W0.00 B0.00 T93.65
General Foreman	W55.56 B38.88 T94.44	W0.00 B0.00 T96.53
Journeyman	W48.74 B38.88 T87.62	W0.00 B0.00 T89.82

Craft: Plumber **APPRENTICE RATE SCHEDULE**

INTERVAL	PERIOD AND RATES									
Yearly	35%	45%	55%	65%	75%					
Benefits	23.76	25.87	27.98	30.09	32.20					

Ratio of Apprentices to Journeymen - 1:4

Craft: Plumber **COMMENTS/NOTES**

APPRENTICE RATE SCHEDULE AS OF 7-1-18:

INTERVAL	PERIOD AND RATES				
Yearly	35%	45%	55%	65%	75%
Benefits	24.25	26.49	28.76	31.00	33.26

The regular workday shall consist of 8 hours between 6:00 AM and 4:30 PM.

FOREMAN REQUIREMENTS (number of Plumbers on site):
- (1to 8)- 1 Foreman
- (9 to 16)- 1 Foreman and 1 Assistant General Foreman
- (17 to 40)- 1 Foreman for every (1 to 8 Plumbers) and 1 Assistant General Foreman every (1 to 5 gangs). One note, a "gang" is a group of 8 men.
- (41 and more)- 1 Foreman for every (1 to 8 Plumbers), 1 Assistant General Foreman every (1 to 5 gangs) and 1 General Foreman. One note, for every additional Assistant General Foreman over five designated, the General Foreman shall receive an additional 10 cents per hour.

SHIFT DIFFERENTIALS:
-The second shift shall work 7.5 hours and receive 8 hours pay, at a rate equal to the hourly rate plus 25%, inclusive of benefits.
- When a third shift is worked, the third shift shall work 7.5 hours and receive 8 hours pay, at a rate equal to the hourly rate

plus 30%, inclusive of benefits.
- A second shift may be established without a first shift, provided the second shift starts at 1:00 PM or later.

OVERTIME:
- Hours in excess of 8 per day, or before of after the regular workday, Monday through Friday, that are not shift work, and the first 10 hours on Saturdays, shall be paid at time and one-half, inclusive of benefits. Hours in excess of 10 on Saturdays, and all hours on Sundays and holidays, shall be paid at double time, inclusive of benefits.
- Four 10-hour days may be worked, Mon to Thurs, at straight time, with Friday used as a make-up day for a day lost due to inclement weather. If Fri. is not a make-up day, the first 10 hours shall be paid at time and one-half, and hours in excess of 10 at double time, inclusive of benefits.

RECOGNIZED HOLIDAYS: New Year's Day, Presidents' Day, Memorial Day, July 4th, Labor Day, Presidential Election Day, Veterans' Day, Thanksgiving Day, Christmas Day. Sunday holidays will be observed the following Monday.

NEW JERSEY DEPARTMENT OF LABOR AND WORKFORCE DEVELOPMENT

PREVAILING WAGE RATE DETERMINATION

County - MERCER

Craft: Roofer **PREVAILING WAGE RATE**

	05/02/18
Foreman (5 workers or less)	W39.15 B31.27 T70.42
Foreman (6 workers or more)	W39.65 B31.27 T70.92
Journeyman	W37.15 B31.27 T68.42

Craft: Roofer **APPRENTICE RATE SCHEDULE**

INTERVAL	PERIOD AND RATES									
Yearly	52%	55%	60%	75%						
Benefits	22.29	24.54	31.27	31.27						

Ratio of Apprentices to Journeymen - *

* 1:2, 2:4, 3:6, 4:8, 5:10, 6:12, 7:14

Craft: Roofer **COMMENTS/NOTES**

NOTE: Mopper, Operator of Felt Laying Machine or Slag Dispenser shall receive an additional $.50 per hour.

FOREMAN REQUIREMENTS:
- There must be a Foreman on all jobs.
- Foreman rate depends on the number of Roofers on the job, as indicated.

The regular workday is 8 hours between 5:00 AM and 4:30 PM.

OVERTIME:
Hours in excess of 8 per day, or before or after the regular workday, Monday through Friday, and all hours on Saturdays, Sundays, and holidays shall be paid at time and one-half the wage rate.

RECOGNIZED HOLIDAYS: New Year's Day, Memorial Day, July 4th, Labor Day, Thanksgiving Day, Christmas Day. Sunday holidays will be observed the following Monday.

NEW JERSEY DEPARTMENT OF LABOR AND WORKFORCE DEVELOPMENT

PREVAILING WAGE RATE DETERMINATION

County - MERCER

Craft: Roofer - Shingle, Slate & Tile **PREVAILING WAGE RATE**

	05/02/18
Foreman (3 workers or less)	W27.75 B20.37 T48.12
Foreman (4 workers or more)	W28.50 B20.37 T48.87
Helper	W13.75 B20.37 T34.12
Journeyman (shingle work)	W27.50 B20.37 T47.87

Craft: Roofer - Shingle, Slate & Tile **APPRENTICE RATE SCHEDULE**

INTERVAL	PERIOD AND RATES									
Yearly	60%	70%	80%							

Ratio of Apprentices to Journeymen - *

* 1:2, 2:4, 3:6, 4:8, 5:10, 6:12, 7:14

Craft: Roofer - Shingle, Slate & Tile **COMMENTS/NOTES**

NOTE: Above rates are for Shingle work only. Slate and Tile work rates are an additional $3.00 per hour.

HELPER RATIO: 1 Helper to 1 Journeyman

FOREMAN REQUIREMENTS:
- There must be a Foreman on all jobs.
- Foreman rate depends on the number of Roofers on the job, as indicated.

OVERTIME:
Hours in excess of 8 per day, Monday through Friday, and all hours on Saturdays, Sundays, and holidays shall be paid at time and one-half the wage rate.

RECOGNIZED HOLIDAYS: New Year's Day, Memorial Day, July 4th, Labor Day, Thanksgiving Day, Christmas Day. Sunday holidays will be observed the following Monday.

NEW JERSEY DEPARTMENT OF LABOR AND WORKFORCE DEVELOPMENT

PREVAILING WAGE RATE DETERMINATION

County - MERCER

Craft: Sheet Metal Sign Installation **PREVAILING WAGE RATE**

	08/15/18
Foreman	W28.48 B22.81 T51.29
Journeyman	W26.48 B22.81 T49.29

Craft: Sheet Metal Sign Installation **APPRENTICE RATE SCHEDULE**

INTERVAL	PERIOD AND RATES									
1000 Hours	40%	45%	50%	55%	60%	65%	70%	75%	80%	90%
Benefits	22.32	22.36	22.40	22.44	22.48	22.52	22.56	22.60	22.64	22.72

Ratio of Apprentices to Journeymen - 1:2

Craft: Sheet Metal Sign Installation **COMMENTS/NOTES**

HAZARDOUS DUTY:
Sign Installers working from a bosun's chair or outside swinging scaffold at a height of 60 feet or more: + $5.00 per hour.

FOREMAN REQUIREMENTS:
When there are 3 or more Sign Installers on a job, one must be designated a Foreman.

The regular workday shall be 8 hours, between 8:00 AM and 5:00 PM.

OVERTIME:
Hours in excess of 8 per day, or outside the regular workday, Monday through Friday, and all hours on Saturdays and Sundays shall be paid at time and one-half the regular rate. All hours on holidays shall be paid at time and one-half the regular rate.

RECOGNIZED HOLIDAYS: New Year's Day, Presidents' Day, Good Friday, Memorial Day, July 4th, Labor Day, Veterans' Day, Thanksgiving Day, day after Thanksgiving, Christmas Day. Saturday holidays will be observed the preceding Friday, Sunday holidays will be observed the following Monday.

NEW JERSEY DEPARTMENT OF LABOR AND WORKFORCE DEVELOPMENT

PREVAILING WAGE RATE DETERMINATION

County - MERCER

Craft: Sheet Metal Worker **PREVAILING WAGE RATE**

	06/29/18	06/01/19	06/01/20
Foreman	W51.11 B40.19 T91.30	W0.00 B0.00 T94.05	W0.00 B0.00 T97.55
Journeyman	W48.11 B40.19 T88.30	W0.00 B0.00 T91.05	W0.00 B0.00 T94.55

Craft: Sheet Metal Worker **APPRENTICE RATE SCHEDULE**

INTERVAL	PERIOD AND RATES									
6 months	40%	45%	50%	55%	60%	65%	70%	75%		
Benefits	13.65	15.19	16.75	18.29	19.83	27.01	29.00	30.97		

Ratio of Apprentices to Journeymen- 1:3, except for the following types of work where the ratio shall be 1:1 (architectural metal work, testing and balancing, lockers, shelving and toilet partitions).*
* For work performed in a fabrication shop, the ratio will be applied on a "company-wide" basis (i.e. the total number of apprentices and journeymen employed by the company).

Craft: Sheet Metal Worker **COMMENTS/NOTES**

JOB SITE FOREMAN REQUIREMENTS:
- When there are 2 to 9 Sheet Metal Workers on a jobsite, 1 must be designated a Foreman.
- When there are 10 to 16 Sheet Metal Workers on a job site, 2 must be designated Foremen.
- When there are 17 to 23 Sheet Metal Workers on a job site, 3 must be designated Foremen.
- For every 7 addtional Sheet Metal Workers on a job site, there shall be 1 additional Foreman.

SHOP FOREMAN REQUIREMNTS (For custom fabrication):
- When there are 1 to 10 Sheet Metal Workers in the shop, 1 must be designated a Foreman.
- For every 10 additional Sheet Metal Workers in the shop, 1 must be designated a Foreman.

The regular workday consists of 8 hours, between 6:00 AM and 4:30 PM.

SHIFT DIFFERENTIALS:
- Shift work must run for a minimum of 5 consecutive workdays.
- There must be a day shift worked in order to have a 2nd and/or 3rd Shift.
- Shop work does not satisfy shift requirements.
- 2nd Shift (4:30 PM-12:30 AM) shall be paid an additional 15% of the regular rate per hour inclusive of benefits, and receive 8 hours pay for 7.5 hours of work.
- 3rd Shift (12:30 AM-8:00 AM) shall be paid an additional 25% of the regular rate per hour inclusive of benefits, and receive 8 hours pay for 7 hours of work.

OVERTIME:
Hours in excess of 8 per day, or before or after the regular workday, Monday through Friday, that are not shift work, and all

hours on Saturday, shall be paid at time and one-half the regular rate. All hours on Sundays and holidays shall be paid at double the regular rate.

RECOGNIZED HOLIDAYS: New Year's Day, Presidents' Day, Good Friday, Memorial Day, July 4th, Labor Day, Presidential Election Day, Veterans' Day, Thanksgiving Day, Christmas Day. Saturday holidays will be observed the preceding Friday, Sunday holidays will be observed the following Monday.

NEW JERSEY DEPARTMENT OF LABOR AND WORKFORCE DEVELOPMENT

PREVAILING WAGE RATE DETERMINATION

County - MERCER

Craft: Sprinkler Fitter **PREVAILING WAGE RATE**

	05/01/18
Foreman	W59.10 B27.02 T86.12
Journeyman	W55.75 B27.02 T82.77

Craft: Sprinkler Fitter **APPRENTICE RATE SCHEDULE**

INTERVAL	PERIOD AND RATES									
6 Months	18.14	20.52	22.65	25.03	27.40	30.28	32.66	34.79	37.16	39.54
Benefits	10.87	10.87	13.80	20.52	20.85	21.17	21.50	21.82	22.15	22.47

Ratio of Apprentices to Journeymen - 1:4

Craft: Sprinkler Fitter **COMMENTS/NOTES**

APPRENTICE RATE SCHEDULE AS OF 5-1-18:

INTERVAL	PERIOD AND RATES									
6 Months	18.14	20.52	22.90	25.28	27.65	30.53	32.91	35.29	37.66	40.04
Benefits	10.57	10.57	13.50	20.22	20.55	20.87	21.20	21.52	21.85	22.17

The regular workday shall be 8 hours, between 7:00 AM and 4:30 PM

SHIFT DIFFERENTIALS:
-Second and third shifts shall receive an additional 15% of the hourly rate, per hour.

OVERTIME:
- Hours outside of the regular workday, and the first 2 hours in excess of 8 per day (9th and 10th hours), Monday through Friday, and the first 8 hours on Saturdays shall be paid at time and one-half the hourly rate. Hours in excess of 10 per day, Monday through Friday, hours in excess of 8 on Saturdays, and all hours on Sundays and holidays shall be paid at double the hourly rate.
- Employees may work four 10-hour days at straight time, Monday through Friday, between 7:00 AM and 6:30 PM. The first 2 hours in excess of 10 per day (11th and 12th hours), the first 10 hours on the fifth day, and the first 10 hours on Saturdays shall be paid at time and one-half the hourly rate. Hours in excess of 12 per day, Monday through Friday, and all hours on Sundays and holidays shall be paid at double the hourly rate.

RECOGNIZED HOLIDAYS: New Year's Day, Memorial Day, July 4th, Labor Day, Thanksgiving Day, the day after Thanksgiving, Christmas Day. Sunday holidays will be observed the following Monday.

NEW JERSEY DEPARTMENT OF LABOR AND WORKFORCE DEVELOPMENT

PREVAILING WAGE RATE DETERMINATION

County - MERCER

Craft: Tile Finisher-Marble **PREVAILING WAGE RATE**

	01/01/19
Finisher	W47.07 B34.58 T81.65

Craft: Tile Finisher-Marble **APPRENTICE RATE SCHEDULE**

INTERVAL	PERIOD AND RATES									
750 Hours	40%	45%	50%	55%	60%	65%	70%	75%	85%	95%

Ratio of Apprentices to Journeymen - 1:4

Craft: Tile Finisher-Marble **COMMENTS/NOTES**

OVERTIME:
Hours in excess of 7 per day, Monday through Friday, and the first 7 hours on Saturdays shall be paid at time and one half the regular rate, inclusive of benefits. Hours in excess of 7 on Saturdays and all hours on Sundays and holidays shall be paid at double the regular rate, inclusive of benefits.

RECOGNIZED HOLIDAYS: New Year's Day, Presidents' Day, Good Friday, Memorial Day, July 4th, Labor Day, Columbus Day, Veterans' Day, Thanksgiving Day and the day after, Christmas Day. Sunday holidays observed the following Monday.

NEW JERSEY DEPARTMENT OF LABOR AND WORKFORCE DEVELOPMENT

PREVAILING WAGE RATE DETERMINATION

County - MERCER

Craft: Tile Setter - Ceramic **PREVAILING WAGE RATE**

	12/03/18
Finisher	W45.08 B30.27 T75.35
Setter	W58.37 B33.69 T92.06

Craft: Tile Setter - Ceramic **APPRENTICE RATE SCHEDULE**

INTERVAL	PERIOD AND RATES									
750 Hours	35%	40%	50%	55%	60%	65%	70%	75%	80%	90%

Ratio of Apprentices to Journeymen - 1:4

Craft: Tile Setter - Ceramic **COMMENTS/NOTES**

OVERTIME:
Hours in excess of 7 per day, and the first 10 hours on Saturdays shall be paid at time and one-half the hourly rate. All hours on Saturdays after 10 hours shall be paid double the hourly rate. All hours on Sundays and holidays shall be paid at double the hourly rate.

RECOGNIZED HOLIDAYS: New Year's Day, Memorial Day, July 4th, Labor Day, Thanksgiving Day, Christmas Day.

ELECTRICIAN- UTILITY WORK (NORTH) **Rates Expiration Date :**

Effective Dates:

12/02/2018			12/01/2019	11/29/2020
Rate	Fringe	Total	Total	Total
52.01	34.84	86.85	89.11	91.36

CLASSIFICATIONS:

Special License Operator

Effective Dates:

12/02/2018			12/01/2019	11/29/2020
Rate	Fringe	Total	Total	Total
51.49	34.49	85.98	88.22	90.44

CLASSIFICATIONS:

Transit Man

Effective Dates:

12/02/2018			12/01/2019	11/29/2020
Rate	Fringe	Total	Total	Total
49.93	33.45	83.38	85.53	87.70

CLASSIFICATIONS:

Line Equipment Operator

Effective Dates:

12/02/2018			12/01/2019	11/29/2020
Rate	Fringe	Total	Total	Total
43.69	29.27	72.96	74.84	76.73

CLASSIFICATIONS:

Dynamite Man

Effective Dates:

12/02/2018			12/01/2019	11/29/2020
Rate	Fringe	Total	Total	Total
65.01	43.55	108.56	111.38	114.19

CLASSIFICATIONS:

General Foreman

Effective Dates:

12/02/2018			12/01/2019	11/29/2020
Rate	Fringe	Total	Total	Total
59.81	40.07	99.88	102.47	105.05

CLASSIFICATIONS:

Assistant General Foreman

ELECTRICIAN- UTILITY WORK (NORTH) **Rates Expiration Date :**

Electrician-Utility Work (North)
(For apprentice rates refer to Electrician-Utility Work (North) in any county rate package).
These rates apply to work contracted for by the following utility companies:
Public Service Electric & Gas Co. of NJ, GPU Energy, Borough of Madison Electric Department, Sussex Rural Electric Cooperative, Rockland Utilities, and Butler Municipal Electric Co.
These rates do not apply to work on substations or switching stations.
For Utility work contracted for by a utility company other than those listed above or those listed under "Electrician-Utility Work (South), see the "Outside Commercial Rates" for the county in which the jobsite is located.

* FOR OUTSIDE COMMERCIAL RATES PLEASE SEE COUNTY RATES

The regular workday is 8 hours, between 6:00 AM and 6:00 PM.
FOR EMERGENCY WORK ONLY: (emergency work is defined as work caused by storm, catastrophe, act of god, and circumstances beyond the control of the employer)-all hours of work shall be paid at double the hourly rate.
SHIFT DIFFERENTIALS:
Shift work must run for a minimum of 5 consecutive workdays.
2nd shift (between the hours of 4:30 PM and 1:00 AM): 8 hours of work + 17.3% of the regular rate, inclusive of benefits.
3rd shift (between the hours of 12:30 AM and 9:00 AM): 8 hours of work + 31.4% of the regular rate per hour, inclusive of benefits.

OVERTIME:
Hours in excess of 8 per day, or before or after the regular wokday Monday through Friday, that is not shift work, and all hours on Saturday shall be paid at time and one-half the regular rate, inclusive of benefits. All hours on Sundays and holidays shall be paid at double the hourly rate, inclusive of benefits.
Four 10-hour days may worked, at straight time, between 7:00 AM and 6:30 PM, Monday through Thursday.

RECOGNIZED HOLIDAYS:
New Year's Day, Presidents' Day, Memorial Day, July 4th, Labor Day, Presidential Election Day, Veterans' Day, Thanksgiving Day and Christmas Day, or day on which they are legally observed.

Effective Dates:

12/02/2018			12/01/2019	11/29/2020
Rate	Fringe	Total	Total	Total
55.13	36.93	92.06	94.45	96.84

CLASSIFICATIONS:

Chief Lineman

Effective Dates:

12/02/2018			12/01/2019	11/29/2020
Rate	Fringe	Total	Total	Total
52.01	34.84	86.85	89.11	91.36

CLASSIFICATIONS:

Journeyman Lineman

TERRITORY

ENTIRE STATE

NEW JERSEY DEPARTMENT OF LABOR AND WORKFORCE DEVELOPMENT

PREVAILING WAGE RATE DETERMINATION

ASPHALT LABORERS- NORTH **Rates Expiration Date :**

Effective Dates:

	03/01/2019		03/01/2020
Rate	Fringe	Total	Total
41.50	31.53	73.03	75.53

CLASSIFICATIONS:

Asphalt Laborer

ASPHALT LABORERS- NORTH **Rates Expiration Date :**

THESE RATES APPLY IN THE FOLLOWING COUNTIES ONLY:
Bergen, Essex, Hudson, Hunterdon, Middlesex, Monmouth, Morris, Passaic, Somerset, Sussex, Union, Warren
{For apprentice rates refer to "Laborer - Heavy & General" apprentice rates in any county rate package}
The regular workday consists of 8 hours, starting at 7:00 AM or 8:00 AM.
SHIFT DIFFERENTIALS:
- Shifts must start at 3:00 PM, 4:00 PM, 12:00 AM, or 1:00 AM, to be considered shift work, except when the project owner mandates special hours of work in the job specifications, in which case those hours may be considered shift work.
- When such hours are mandated by the project owner, a shift that begins before midnight on Friday and ends on Saturday morning, or that begins at or after 8:00 PM on Sunday and ends on Monday morning may be paid at the shift differential rate.
- Shifts shall receive an additional $3.00 per hour.
OVERTIME:
- Hours in excess of 8 per day, Monday through Friday, or outside of the regular workday that are not shift work, and all hours on Saturdays, shall be paid at time and one-half the hourly rate. All hours on Sundays and holidays shall be paid at double the hourly rate.
- Four 10-hour days may be worked, Monday through Thursday, at straight time, with Friday used as a make-up day for a day lost to inclement weather. If Friday is not a make-up day, all hours on Friday shall be paid at time and one-half the hourly rate.
RECOGNIZED HOLIDAYS: New Year's Day, Presidents' Day, Memorial Day, July 4th, Labor Day, Presidential Election Day, Veterans' Day, Thanksgiving Day, Christmas Day. Sunday holidays observed the following Monday. Veterans Day may be substituted for the day after Thanksgiving. However, in the trading of Veterans Day for the day after Thanksgiving, if overtime is worked on Veterans Day, it shall be paid at double the hourly rate.
Hazardous Waste Work:
-where Level A, B, or C protection is required: + $3.00/hr
-other Hazardous Waste site: + $1.00/hr

Effective Dates:

	03/01/2019		03/01/2020
Rate	Fringe	Total	Total
43.75	31.53	75.28	77.78

CLASSIFICATIONS:

Asphalt Foreman

Effective Dates:

	03/01/2019		03/01/2020
Rate	Fringe	Total	Total
42.45	31.53	73.98	76.48

CLASSIFICATIONS:

Asphalt Screedman

Effective Dates:

	03/01/2019		03/01/2020
Rate	Fringe	Total	Total
42.20	31.53	73.73	76.23

CLASSIFICATIONS:

Asphalt Raker or Lute Man

PIPELINE - GAS DISTRIBUTION **Rates Expiration Date :**

These rates apply to the following: welding on gas line distribution systems (that portion of the gas distribution system placed in streets, roads, subways, tunnels, viaducts, highways and easements which serves the users of gas).

SHIFT DIFFERENTIALS:
An "irregular" shift may start any time from 5:00 PM to 12:00 AM, Monday through Friday, and shall receive an additional 15% of the regular rate per hour, inclusive of benefits.

OVERTIME:
Hours in excess of forty per week, and all hours on Saturdays shall be paid at time and one-half the regular rate, inclusive of benefits. All hours on Sundays and holidays shall be paid at double the regular rate, inclusive of benefits.

RECOGNIZED HOLIDAYS: New Year's Day, Memorial Day, July 4th, Labor Day, Thanksgiving Day, and Christmas Day. Sunday holidays observed the following Monday.

Effective Dates:

	11/01/2018		11/01/2019
Rate	Fringe	Total	Total
60.00	23.73	83.73	86.23

CLASSIFICATIONS:

Pipeline Journeyman Welder

Effective Dates:

	11/01/2018		11/01/2019
Rate	Fringe	Total	Total
60.00	23.73	83.73	86.23

CLASSIFICATIONS:

Pipeline Journeyman

Effective Dates:

	11/01/2018		11/01/2019
Rate	Fringe	Total	Total
38.46	17.54	56.00	57.67

CLASSIFICATIONS:

Pipeline Helper

TERRITORY

ENTIRE STATE

NEW JERSEY DEPARTMENT OF LABOR AND WORKFORCE DEVELOPMENT

PREVAILING WAGE RATE DETERMINATION

PIPELINE - MAINLINE TRANSMISSION Rates Expiration Date :

Effective Dates:

06/08/2018

Rate	Fringe	Total
54.61	29.59	84.20

CLASSIFICATIONS:

Pipeline Journeyman

Effective Dates:

06/08/2018

Rate	Fringe	Total
33.55	20.42	53.97

CLASSIFICATIONS:

Pipeline Helper

TERRITORY
ENTIRE STATE

NEW JERSEY DEPARTMENT OF LABOR AND WORKFORCE DEVELOPMENT
PREVAILING WAGE RATE DETERMINATION

PIPELINE - MAINLINE TRANSMISSION **Rates Expiration Date :**

These rates apply to the following: welding on Transportation Mainline pipe lines (cross-country pipe lines, or any segments thereof, transporting coal, gas, oil, water or other transportable materials, vapors or liquids, including portions of such pipe lines within private property boundaries up to the final metering station or connection - the point where a valve, consumer connection, or town border station divides mainline transmission lines or higher pressure lateral and branch lines from lower pressure distribution systems).

PER DIEM PAYMENT:
In addition to the total wage rate paid for each craft, the following per diem (per day) amounts must also be paid - Pipeline Journeyman: $42.50; Pipeline Journeyman Welder: $102.50; and Pipeline Helper: $42.50. Note: in order to receive the per diem payment an employee must work a minimum of 8 hours in a 24 hour period.

NOTES:
- Journeymen employed as "stringer bead" welders and journeymen who are regularly employed as "hot-pass" welders shall receive $1.00 per hour more than other journeymen.
- Welders running "stringer bead" or "hot-pass" on "cutouts" or "tie-ins" on a production basis shall be paid $1.00 per hour above the journeymen rate.
- Whenever a welder helper is employed using a power buffer or power grinder immediately behind the stringer bead and/or hot-pass welders, and the pipe gang is set on a production basis, the helper shall be paid $2.00 per hour above the helper rate.
- If back welding is performed inside a pipe under either or both of the following conditions, the welder engaged in the welding will receive $3.00 per hour above the regular rate for the job only for the days on which such back welding is performed:
  - The employer elects, as a regular procedure, to back weld each line-up. This condition is not intended to apply to occasional back welding performed by the pipe gang to repair a bead, to rectify a "high-lo" condition or wall thickness, etc.
  - A welder is required to back weld a completed weld behind the firing line.
- If the welder helper is required to go inside the pipe for the purpose of brushing, buffing and grinding the weld, they shall receive a wage rate $1.00 per hour above the regular
helper rate for the days involved.
- Welders working on "hot work" shall be paid $2.00 per hour above the regular rate for each day engaged in such work. "Hot work' is defined as work on lines in service where there is the danger of fire or explosion.

The regular workday shall be 8 hours, between 8:00 AM and 4:30 PM.

OVERTIME:
Hours in excess of 8 per day, and all hours on Sundays shall be paid at time and one-half the regular rate, inclusive of benefits. All hours on holidays shall be paid at double the regular rate, inclusive of benefits.

RECOGNIZED HOLIDAYS: New Year's Day, July 4th, Labor Day, Thanksgiving Day, and Christmas Day. Sunday holidays observed the following Monday.

Effective Dates:

	06/08/2018	
Rate	Fringe	Total
54.61	29.59	84.20

CLASSIFICATIONS:

Pipeline Journeyman Welder

TERRITORY

ENTIRE STATE

NEW JERSEY DEPARTMENT OF LABOR AND WORKFORCE DEVELOPMENT

PREVAILING WAGE RATE DETERMINATION

HEAVY & GENERAL LABORERS - SOUTH Rates Expiration Date :

Effective Dates:

03/01/2019			03/01/2020
Rate	Fringe	Total	Total
42.45	31.53	73.98	76.48

CLASSIFICATIONS:

concrete finisher; setter of brick or stone pavers; stone cutter; form setter; manhole, catch basin, or inlet builder; rammer; gunite nozzle man

HEAVY & GENERAL LABORERS - SOUTH **Rates Expiration Date :**

Effective Dates:

	03/01/2019		03/01/2020
Rate	Fringe	Total	Total
42.20	31.53	73.73	76.23

CLASSIFICATIONS:

pipe layer; laser man; conduit or duct line layer; operator of jack hammer, chipping hammer, pavement breaker, concrete cutter, asphalt cutter, sheet hammer, or walk-behind saw cutter; sandblaster; acetylene cutting or burning

Effective Dates:

	03/01/2019		03/01/2020
Rate	Fringe	Total	Total
42.20	31.53	73.73	76.23

CLASSIFICATIONS:

wagon or directional drill operator; drill master

Effective Dates:

	03/01/2019		03/01/2020
Rate	Fringe	Total	Total
46.00	31.53	77.53	80.03

CLASSIFICATIONS:

blaster

Effective Dates:

	03/01/2019		03/01/2020
Rate	Fringe	Total	Total
43.75	31.53	75.28	77.78

CLASSIFICATIONS:

labor foreman, drill foreman, pipe foreman, grade foreman, finisher foreman, concrete foreman

Effective Dates:

	03/01/2019		03/01/2020
Rate	Fringe	Total	Total
44.75	31.53	76.28	78.78

CLASSIFICATIONS:

general foreman

HEAVY & GENERAL LABORERS - SOUTH **Rates Expiration Date :**

THESE RATES APPLY IN THE FOLLOWING COUNTIES ONLY:
Atlantic, Burlington, Camden, Cape May, Cumberland, Gloucester, Mercer, Ocean, Salem

{For apprentice rates refer to "Laborer - Heavy & General" apprentice rates in any county rate package}

The regular workday consists of 8 hours, starting at 7:00 AM or 8:00 AM.

SHIFT DIFFERENTIALS:
- Shifts must start at 3:00 PM, 4:00 PM, 12:00 AM, or 1:00 AM, to be considered shift work, except when the project owner mandates special hours of work in the job specifications, in which case those hours may be considered shift work.
- When such hours are mandated by the project owner, a shift that begins before midnight on Friday and ends on Saturday morning, or that begins at or after 8:00 PM on Sunday and ends on Monday morning may be paid at the shift differential rate.
- Shifts shall receive an additional $3.00 per hour.

OVERTIME:
- Hours in excess of 8 per day, Monday through Friday, or outside of the regular workday that are not shift work, and all hours on Saturdays, shall be paid at time and one-half the hourly rate. All hours on Sundays and holidays shall be paid at double the hourly rate.
- Four 10-hour days may be worked, Monday through Thursday, at straight time, with Friday used as a make-up day for a day lost to inclement weather. If Friday is not a make-up day, all hours on Friday shall be paid at time and one-half the hourly rate.

RECOGNIZED HOLIDAYS: New Year's Day, Presidents' Day, Memorial Day, July 4th, Labor Day, Presidential Election Day, Veterans' Day, Thanksgiving Day, Christmas Day. Sunday holidays observed the following Monday. Veterans Day may be substituted for the day after Thanksgiving. However, in the trading of Veterans Day for the day after Thanksgiving, if overtime is worked on Veterans Day, it shall be paid at double the hourly rate.

Hazardous Waste Work:
-where Level A, B, or C protection is required: + $3.00/hr
-other Hazardous Waste site: + $1.00/hr

Effective Dates:

	03/01/2019		**03/01/2020**
Rate	Fringe	Total	Total
41.50	31.53	73.03	75.53

CLASSIFICATIONS:

basic, landscape, or railroad track laborer; utility meter installer; flagman; salamander tender; pitman; dumpman; rakers or tampers on cold patch work; wrappers or coaters of pipe; waterproofers; tree cutter, timberman

Effective Dates:

	03/01/2019		**03/01/2020**
Rate	Fringe	Total	Total
41.50	31.53	73.03	75.53

CLASSIFICATIONS:

wagon drill or drill master helper; powder carrier; magazine tender; signal man

HEAVY & GENERAL LABORERS - NORTH **Rates Expiration Date :**

Effective Dates:

	03/01/2019		03/01/2020
Rate	Fringe	Total	Total
42.45	31.53	73.98	76.48

CLASSIFICATIONS:

"B" Rate:
concrete finisher; setter of brick or stone pavers; stone cutter; form setter; manhole, catch basin, or inlet builder; asphalt screedman; rammer; hardscaping; gunite nozzle man

Effective Dates:

	03/01/2019		03/01/2020
Rate	Fringe	Total	Total
46.00	31.53	77.53	80.03

CLASSIFICATIONS:

"A" Rate:
blaster

Effective Dates:

	03/01/2019		03/01/2020
Rate	Fringe	Total	Total
43.75	31.53	75.28	77.78

CLASSIFICATIONS:

"FOREMAN" Rate:
labor foreman, asphalt foreman, drill foreman, pipe foreman, grade foreman, finisher foreman, concrete foreman

Effective Dates:

	03/01/2019		03/01/2020
Rate	Fringe	Total	Total
44.75	31.53	76.28	78.78

CLASSIFICATIONS:

"GENERAL FOREMAN" Rate

HEAVY & GENERAL LABORERS - NORTH **Rates Expiration Date :**

THESE RATES APPLY IN THE FOLLOWING COUNTIES ONLY:
Bergen, Essex, Hudson, Hunterdon, Middlesex, Monmouth, Morris, Passaic, Somerset, Sussex, Union, Warren

{For apprentice rates refer to "Laborer - Heavy & General" apprentice rates in any county rate package}

The regular workday consists of 8 hours, starting at 7:00 AM or 8:00 AM.

SHIFT DIFFERENTIALS:
- Shifts must start at 3:00 PM, 4:00 PM, 12:00 AM, or 1:00 AM, to be considered shift work, except when the project owner mandates special hours of work in the job specifications, in which case those hours may be considered shift work.
- When such hours are mandated by the project owner, a shift that begins before midnight on Friday and ends on Saturday morning, or that begins at or after 8:00 PM on Sunday and ends on Monday morning may be paid at the shift differential rate.
- Shifts shall receive an additional $3.00 per hour.

OVERTIME:
- Hours in excess of 8 per day, Monday through Friday, or outside of the regular workday that are not shift work, and all hours on Saturdays, shall be paid at time and one-half the hourly rate. All hours on Sundays and holidays shall be paid at double the hourly rate.
- Four 10-hour days may be worked, Monday through Thursday, at straight time, with Friday used as a make-up day for a day lost to inclement weather. If Friday is not a make-up day, all hours on Friday shall be paid at time and one-half the hourly rate.

RECOGNIZED HOLIDAYS: New Year's Day, Presidents' Day, Memorial Day, July 4th, Labor Day, Presidential Election Day, Veterans' Day, Thanksgiving Day, Christmas Day. Sunday holidays observed the following Monday. Veterans Day may be substituted for the day after Thanksgiving. However, in the trading of Veterans Day for the day after Thanksgiving, if overtime is worked on Veterans Day, it shall be paid at double the hourly rate.

Hazardous Waste Work:
-where Level A, B, or C protection is required: + $3.00/hr
-other Hazardous Waste site: + $1.00/hr

Effective Dates:

	03/01/2019		03/01/2020
Rate	Fringe	Total	Total
41.50	31.53	73.03	75.53

CLASSIFICATIONS:

"D" Rate:
basic, landscape, asphalt, slurry seal, or railroad track laborer; utility meter installer; flagman; salamander tender; pitman; dumpman; rakers or tampers on cold patch work; wrappers or coaters of pipe; waterproofer; timberman; wagon drill or drill master helper; powder carrier; magazine tender; signal man; power buggy operator; tree cutter; operator of basic power tools

Effective Dates:

	03/01/2019		03/01/2020
Rate	Fringe	Total	Total
42.20	31.53	73.73	76.23

CLASSIFICATIONS:

"C" Rate:
pipe layer; laser man; conduit or duct line layer; operator of jack hammer, chipping hammer, pavement breaker, concrete cutter, asphalt cutter, sheet hammer, or walk-behind saw cutter; sandblaster; acetylene cutting or burning; wagon drill, directional drill, or hydraulic drill operator; drill master; core driller; traffic control coordinator; asphalt raker or lute man

TEST BORING PRELIMINARY TO CONSTRUCTION-NORTH **Rates Expiration Date :**

THESE RATES APPLY IN THE FOLLOWING COUNTIES ONLY:
Bergen, Essex, Hudson, Middlesex, Morris, Passaic, Somerset, Union

SHIFT DIFFERENTIAL:
Employees on a shift other than between the hours of 8:00 AM and 5:00 PM shall receive an additional $1.00 per hour.

OVERTIME:
Hours in excess of 8 per day, Monday through Friday, and all hours on Saturday shall be paid at time and one-half the regular rate. All hours on Sundays and holidays shall be paid at double the regular rate.

RECOGNIZED HOLIDAYS: New Year's Day, Memorial Day, July 4th, Labor Day, Thanksgiving Day, and Christmas Day. Sunday holidays observed the following Monday.

Hazardous Waste Pay (for Levels A, B, and C): an additional 10% of the hourly rate, per hour.

A newly hired Helper with no experience in the industry shall be paid as follows:
1st year on the job - 70% of Helper wage rate
2nd year on the job - 80% of Helper wage rate
3rd year on the job - 90% of Helper wage rate
All helpers receive full fringe benefit rate.

Effective Dates:

10/17/2017

Rate	Fringe	Total
31.62	25.55	57.17

CLASSIFICATIONS:

Helper (4th year helper)

Effective Dates:

10/17/2017

Rate	Fringe	Total
39.69	25.55	65.24

CLASSIFICATIONS:

Driller

Effective Dates:

10/17/2017

Rate	Fringe	Total
45.73	25.55	71.28

CLASSIFICATIONS:

Foreman

ASPHALT LABORERS - SOUTH **Rates Expiration Date :**

Effective Dates:

	03/01/2019		03/01/2020
Rate	Fringe	Total	Total
41.90	31.53	73.43	75.93

CLASSIFICATIONS:

Tampers, Smoothers, Kettlemen,
Painters, Shovelers, Roller Boys

Effective Dates:

	03/01/2019		03/01/2020
Rate	Fringe	Total	Total
42.00	31.53	73.53	76.03

CLASSIFICATIONS:

Milling Controller

Effective Dates:

	03/01/2019		03/01/2020
Rate	Fringe	Total	Total
42.20	31.53	73.73	76.23

CLASSIFICATIONS:

Traffic Control Coordinator

ASPHALT LABORERS - SOUTH **Rates Expiration Date :**

"THESE RATES APPLY IN THE FOLLOWING COUNTIES ONLY: Atlantic, Burlington, Camden, Cape May, Cumberland, Gloucester, Mercer, Ocean, Salem
{For apprentice rates refer to "Laborer - Heavy & General" apprentice rates in any county rate package}
The regular workday consists of 8 hours, starting at 7:00 AM or 8:00 AM.
SHIFT DIFFERENTIALS:
- Shifts must start at 3:00 PM, 4:00 PM, 12:00 AM, or 1:00 AM, to be considered shift work, except when the project owner mandates special hours of work in the job specifications, in which case those hours may be considered shift work.
- When such hours are mandated by the project owner, a shift that begins before midnight on Friday and ends on Saturday morning, or that begins at or after 8:00 PM on Sunday and ends on Monday morning may be paid at the shift differential rate.
- Shifts shall receive an additional $3.00 per hour.
OVERTIME:
- Hours in excess of 8 per day, Monday through Friday, or outside of the regular workday that are not shift work, and all hours on Saturdays, shall be paid at time and one-half the hourly rate. All hours on Sundays and holidays shall be paid at double the hourly rate.
- Four 10-hour days may be worked, Monday through Thursday, at straight time, with Friday used as a make-up day for a day lost to inclement weather. If Friday is not a make-up day, all hours on Friday shall be paid at time and one-half the hourly rate.
RECOGNIZED HOLIDAYS: New Year's Day, Presidents' Day, Memorial Day, July 4th, Labor Day, Presidential Election Day, Veterans' Day, Thanksgiving Day, Christmas Day. Sunday holidays observed the following Monday. Veterans Day may be substituted for the day after Thanksgiving. However, in the trading of Veterans Day for the day after Thanksgiving, if overtime is worked on Veterans Day, it shall be paid at double the hourly rate.
Hazardous Waste Work:
-where Level A, B, or C protection is required: + $3.00/hr
-other Hazardous Waste site: + $1.00/hr

Effective Dates:

	03/01/2019		03/01/2020
Rate	Fringe	Total	Total
43.75	31.53	75.28	77.78

CLASSIFICATIONS:

Paving Foreman

Effective Dates:

	03/01/2019		03/01/2020
Rate	Fringe	Total	Total
42.30	31.53	73.83	76.33

CLASSIFICATIONS:

Head Raker

Effective Dates:

	03/01/2019		03/01/2020
Rate	Fringe	Total	Total
42.15	31.53	73.68	76.18

CLASSIFICATIONS:

Raker, Screedman, Luteman

TERRITORY

ENTIRE STATE

NEW JERSEY DEPARTMENT OF LABOR AND WORKFORCE DEVELOPMENT

PREVAILING WAGE RATE DETERMINATION

MICROSURFACING/SLURRY SEAL Rates Expiration Date :

Effective Dates:

03/01/2017

Rate	Fringe	Total
30.30	21.27	51.57

CLASSIFICATIONS:

Cleaner, Taper

TERRITORY
ENTIRE STATE

NEW JERSEY DEPARTMENT OF LABOR AND WORKFORCE DEVELOPMENT
PREVAILING WAGE RATE DETERMINATION

MICROSURFACING/SLURRY SEAL **Rates Expiration Date :**

THESE RATES APPLY IN THE FOLLOWING COUNTIES ONLY:
Atlantic, Burlington, Camden, Cape May, Cumberland, Gloucester, Mercer, Ocean, Salem
IN ALL OTHER COUNTIES use the Heavy and General Laborers - North "Slurry Seal Laborer" rates.

SHIFT DIFFERENTIALS:
Any shift starting at 3:30 PM or later shall receive an additional $0.35/hr

OVERTIME:
Hours in excess of 8 per day or 40 per week shall be paid at time and one-half the hourly rate. All hours on holidays shall be paid at double the hourly rate.

RECOGNIZED HOLIDAYS: New Year's Day, Washington's Birthday, Memorial Day, July 4th, Labor Day, Presidential Election Day, Veterans' Day, Thanksgiving Day, Christmas Day.

Effective Dates:

03/01/2017

Rate	Fringe	Total
36.50	21.27	57.77

CLASSIFICATIONS:

Foreman

Effective Dates:

03/01/2017

Rate	Fringe	Total
33.80	21.27	55.07

CLASSIFICATIONS:

Box man

Effective Dates:

03/01/2017

Rate	Fringe	Total
31.75	21.27	53.02

CLASSIFICATIONS:

Microsurface/Slurry Preparation

Effective Dates:

03/01/2017

Rate	Fringe	Total
31.75	21.27	53.02

CLASSIFICATIONS:

Squeegee man

OPERATING ENGINEERS MARINE-DREDGING **Rates Expiration Date :**

Effective Dates:

04/17/2019			10/01/2019	10/01/2020
Rate	Fringe	Total	Total	Total
31.07	13.26	44.33	45.59	47.10

CLASSIFICATIONS:

Mate, Drag Barge Operator, Steward, Assistant Fill Placer

Welder

Effective Dates:

04/17/2019			10/01/2019	10/01/2020
Rate	Fringe	Total	Total	Total
30.06	13.18	43.24	44.48	45.95

CLASSIFICATIONS:

Boat Operator

Effective Dates:

04/17/2019			10/01/2019	10/01/2020
Rate	Fringe	Total	Total	Total
24.97	12.50	37.47	38.56	39.85

CLASSIFICATIONS:

Shoreman, Deckhand, Rodman, Scowman

Effective Dates:

04/17/2019			10/01/2019	10/01/2020
Rate	Fringe	Total	Total	Total
34.96	13.85	48.81	50.19	51.84

CLASSIFICATIONS:

Crane Operator

TERRITORY
ENTIRE STATE

NEW JERSEY DEPARTMENT OF LABOR AND WORKFORCE DEVELOPMENT
PREVAILING WAGE RATE DETERMINATION

OPERATING ENGINEERS MARINE-DREDGING **Rates Expiration Date :**

NOTE: These wage rates only apply to dredging and other marine construction activities occurring in navigable waters and their tributaries.
Boat crews carrying explosive material (dynamite, pourfex, and other similar materials) shall be paid at 120% of the hourly wage rate for hours engaged in handling of said materials. Employees required to possess a Hazardous Material Certification as a condition of employment shall be compensated at 120% of the hourly wage rate.
OVERTIME:
Hours in excess of 40 per week, and all hours on Saturdays and Sundays, shall be paid at time and one-half the hourly rate. All hours on holidays shall be paid at double the hourly rate.
RECOGNIZED HOLIDAYS: New Year's Day, Martin Luther King Day, Good Friday, Memorial Day, July 4th, Labor Day, Veterans' Day, Thanksgiving Day, Christmas Day. Sunday holidays observed the following Monday.

Effective Dates:

04/17/2019			10/01/2019	10/01/2020
Rate	Fringe	Total	Total	Total
39.23	14.17	53.40	54.91	56.71

CLASSIFICATIONS:

Lead Dredgerman, Operator, Leverman

Licensed Tug Operator (over 1000 HP)

Effective Dates:

04/17/2019			10/01/2019	10/01/2020
Rate	Fringe	Total	Total	Total
33.93	13.77	47.70	49.05	50.66

CLASSIFICATIONS:

Derrick Operator, Spider/Spill Barge Operator

Engineer, Electrician, Chief Welder, Chief Mate

Fill Placer, Operator II

Licensed Boat Operator

Maintenance Engineer

Effective Dates:

04/17/2019			10/01/2019	10/01/2020
Rate	Fringe	Total	Total	Total
31.94	13.62	45.56	46.86	48.39

CLASSIFICATIONS:

Certified Welder

DRILL FOR GROUND WATER SUPPLY **Rates Expiration Date :**

The well driller and/or helper may perform all work relative to the construction, finishing, and servicing of wells, pumps and borings for ground water supply. The present methods of well drilling entailing as they do, many diverse job operations calling for drilling, pump discharge, piping, and the operation of various types of related power equipment, shall all be within the job duties and functions of the well driller and/or helper. In the event that an extension of work should occur beyond water well drilling functions, into the field of general construction work, such extension of work would come under the appropriate rates listed elsewhere in this wage determination.

- For Work Hours, Shift Differentials, Overtime Rates, and Recognized Holidays see the "Operating Engineers" section of this wage determination.

Effective Dates:

01/01/2019			07/01/2019
Rate	Fringe	Total	Total
50.52	32.85	83.37	85.72

CLASSIFICATIONS:

Driller

Effective Dates:

01/01/2019			07/01/2019
Rate	Fringe	Total	Total
43.68	32.85	76.53	78.88

CLASSIFICATIONS:

Driller's Helper

TERRITORY

ENTIRE STATE

NEW JERSEY DEPARTMENT OF LABOR AND WORKFORCE DEVELOPMENT

PREVAILING WAGE RATE DETERMINATION

FREE AIR TUNNEL JOBS **Rates Expiration Date :**

Effective Dates:

	03/01/2019		03/01/2020
Rate	Fringe	Total	Total
42.00	31.53	73.53	76.03

CLASSIFICATIONS:

All Others (including Powder Watchman, Change House Attendant, Top Laborer)

FREE AIR TUNNEL JOBS Rates Expiration Date :

Effective Dates:

	03/01/2019		03/01/2020
Rate	Fringe	Total	Total
43.45	31.53	74.98	77.48

CLASSIFICATIONS:

Iron Foreman, Caulking Foreman, Form Foreman, Cement Finishing Foreman, Concrete Foreman, Track Foreman, Cleanup Foreman, Grout Foreman

Effective Dates:

	03/01/2019		03/01/2020
Rate	Fringe	Total	Total
45.95	31.53	77.48	79.98

CLASSIFICATIONS:

Blaster

Effective Dates:

	03/01/2019		03/01/2020
Rate	Fringe	Total	Total
42.90	31.53	74.43	76.93

CLASSIFICATIONS:

Top Labor Foreman

Effective Dates:

	03/01/2019		03/01/2020
Rate	Fringe	Total	Total
42.55	31.53	74.08	76.58

CLASSIFICATIONS:

Skilled Men (including Caulker, Powder Carrier, all other skilled men)

Skilled Men (including Miner, Drill Runner, Iron Man, Conveyor Man, Manitenance Man, Safety Miner, Rigger, Block Layer, Cement Finisher, Tod Man)

Effective Dates:

	03/01/2019		03/01/2020
Rate	Fringe	Total	Total
42.40	31.53	73.93	76.43

CLASSIFICATIONS:

Semi-Skilled Men (including Bell or Signal Man Top or Bottom, Form Worker & Mover, Concrete Worker, Shaft Man, Tunnel Laborer, Caulker's Helper, all other semi-skilled)

Semi-Skilled Men (including Miner's Helper, Chuck Tender, Track Man, Nipper, Brake Man, Derail Man, Cable Man, Hose Man, Gravel Man, Form Man)

TERRITORY
ENTIRE STATE

NEW JERSEY DEPARTMENT OF LABOR AND WORKFORCE DEVELOPMENT
PREVAILING WAGE RATE DETERMINATION

FREE AIR TUNNEL JOBS **Rates Expiration Date :**

{For apprentice rates refer to "Heavy & General" apprentice rates in any county rate package}

The regular workday consists of 8 hours, starting at 7:00 AM or 8:00 AM.

SHIFT DIFFERENTIALS:
- Shifts must start at 3:00 PM, 4:00 PM, 12:00 AM, or 1:00 AM, to be considered shift work, except when the project owner mandates special hours of work in the job specifications, in which case those hours may be considered shift work.
- When such hours are mandated by the project owner, a shift that begins before midnight on Friday and ends on Saturday morning, or that begins at or after 8:00 PM on Sunday and ends on Monday morning may be paid at the shift differential rate.
- Shifts shall receive an additional $3.00 per hour.

OVERTIME:
- Hours in excess of 8 per day, Monday through Friday, or outside of the regular workday that are not shift work, and all hours on Saturdays, shall be paid at time and one-half the hourly rate. All hours on Sundays and holidays shall be paid at double the hourly rate.
- Four 10-hour days may be worked, Monday through Thursday, at straight time, with Friday used as a make-up day for a day lost to inclement weather. If Friday is not a make-up day, all hours on Friday shall be paid at time and one-half the hourly rate.

RECOGNIZED HOLIDAYS: New Year's Day, Presidents' Day, Memorial Day, July 4th, Labor Day, Presidential Election Day, Veterans' Day, Thanksgiving Day, Christmas Day. Sunday holidays observed the following Monday. Veterans Day may be substituted for the day after Thanksgiving. However, in the trading of Veterans Day for the day after Thanksgiving, if overtime is worked on Veterans Day, it shall be paid at double the hourly rate.

Hazardous Waste Work:
-where Level A, B, or C protection is required: + $3.00/hr
-other Hazardous Waste site: + $1.00/hr

Effective Dates:

	03/01/2019		03/01/2020
Rate	Fringe	Total	Total
44.25	31.53	75.78	78.28

CLASSIFICATIONS:

Walking Boss & Superintendent

Effective Dates:

	03/01/2019		03/01/2020
Rate	Fringe	Total	Total
43.95	31.53	75.48	77.98

CLASSIFICATIONS:

Heading Foreman, Shaft Foreman, Rod Foreman, Electrician Foreman, Rigging Foreman

TEST BORING PRELIMINARY TO CONSTRUCTION-SOUTH/WEST **Rates Expiration Date :**

THESE RATES APPLY IN THE FOLLOWING COUNTIES ONLY:
Atlantic, Burlington, Camden, Cape May, Cumberland, Gloucester, Hunterdon, Mercer, Monmouth, Ocean, Salem, Sussex, Warren

The regular workday consists of 8 hours, Monday to Friday, between 6:00 AM and 4:30 PM.

SHIFT DIFFERENTIALS:
- Shift work must run for 5 consecutive workdays.
- When 2 shifts are worked, the second shift shall receive an additional 10% of the regular rate inclusive of benefits, per hour.
- When 3 shifts are worked, the second shift shall receive 8 hours pay for 7.5 hours of work, plus an additional 10% of the regular rate inclusive of benefits, per hour. The third shift shall receive 8 hours pay for 7 hours of work, plus an additional 15% of the regular rate inclusive of benefits, per hour.
- When such hours are mandated by the project owner, a shift that starts between 8:00 PM and midnight and ends by 6:00 AM Saturday, or that starts after 8:00 PM on Sunday, provided there are consecutive hours of work within the shift, shall receive an additional 15% of the regular rate, inclusive of benefits.
- On Highway, Road, Street, and Sewer projects irregular shifts starting between 5:00 PM and 12:00 AM may be worked Monday through Friday, and shall receive an additional 15% of the regular rate, inclusive of benefits. When working with other trades that receive a higher irregular shift rate, the Operating Engineer shall also receive the higher irregular shift rate.

OVERTIME:
- Hours in excess of 8 per day, or outside of the regular workday, Monday through Friday, that are not shift work, and all hours on Saturdays shall be paid at time and one-half the regular rate, inclusive of benefits. All hours on Sundays and holidays shall be paid at double the regular rate, inclusive of benefits.
- Four 10-hour days may be worked, Monday through Thursday, at straight time, with all hours on Friday paid at time and one-half the regular rate, inclusive of benefits.

RECOGNIZED HOLIDAYS: New Year's Day, Presidents' Day, Memorial Day, July 4th, Labor Day, Presidential Election Day, Veterans Day, Thanksgiving Day, Christmas Day. Sunday holidays observed the following Monday. When all trades on a particular job site agree, the day after Thanksgiving may be substituted for Veteran's Day.

On hazardous waste removal work or asbestos removal work, on a state or federally designated hazardous waste site, where the operating engineer is in direct contact with hazardous material and when personal protective equipment is required for respiratory, skin, and eye protection, the operating engineer shall receive an additional 20% of the hourly wage, per hour.

Effective Dates:

	01/01/2019		07/01/2019
Rate	Fringe	Total	Total
51.77	32.85	84.62	86.97

CLASSIFICATIONS:

Driller

Effective Dates:

	01/01/2019		07/01/2019
Rate	Fringe	Total	Total
44.93	32.85	77.78	80.13

CLASSIFICATIONS:

Driller's Helper

TERRITORY

ENTIRE STATE

NEW JERSEY DEPARTMENT OF LABOR AND WORKFORCE DEVELOPMENT

PREVAILING WAGE RATE DETERMINATION

STRUCTURAL STEEL ERECTION **Rates Expiration Date :**

Effective Dates:

	01/01/2019		**07/01/2019**
Rate	Fringe	Total	Total
55.79	32.85	88.64	90.99

CLASSIFICATIONS:

Helicopter Pilot & Engineer

STRUCTURAL STEEL ERECTION **Rates Expiration Date :**

Effective Dates:

	01/01/2019		07/01/2019
Rate	Fringe	Total	Total
52.10	32.85	84.95	87.30

CLASSIFICATIONS:

Field Engineer-Chief of Party

Vacuum Truck

Effective Dates:

	01/01/2019		07/01/2019
Rate	Fringe	Total	Total
60.29	32.85	93.14	95.49

CLASSIFICATIONS:

Cranes (all cranes, land or floating with booms, including jib, 140 ft. and over, above ground). Derricks (all derricks, land, floating or Chicago Boom type with booms including jib, 140 ft. and over, above ground), and Pile Drivers (all types) 100 tons and over and Tower Cranes.

Effective Dates:

	01/01/2019		07/01/2019
Rate	Fringe	Total	Total
58.63	32.85	91.48	93.83

CLASSIFICATIONS:

Cranes (all cranes, land or floating with booms including jib, less than 140 ft. abovr ground), Derricks (all derricks. land, floating or Chicago Boom type with booms including jib, less than 140 ft. above ground), Pile Drivers (all types), 100 tons and over and Tower Crane.

Effective Dates:

	01/01/2019		07/01/2019
Rate	Fringe	Total	Total
55.79	32.85	88.64	90.99

CLASSIFICATIONS:

Cranes (all cranes, land or floating with booms including jib, 140 ft. and over, above ground), Derricks (all derricks, land, floating or Chicago Boom type with booms including jib, 140 ft. and over, above ground), Pile Drivers (all types), under 100 tons.

Effective Dates:

	01/01/2019		07/01/2019
Rate	Fringe	Total	Total
54.13	32.85	86.98	89.33

CLASSIFICATIONS:

Cranes (all cranes, land or floating with booms including jib, less than 140 ft. above ground), Derricks (all derricks, land, floating or Chicago Boom type with booms including jib, less than 140 ft. above ground), Pile Drivers (all types), under 100 tons.

STRUCTURAL STEEL ERECTION **Rates Expiration Date :**

Effective Dates:

01/01/2019			07/01/2019
Rate	Fringe	Total	Total
47.15	32.85	80.00	82.35

CLASSIFICATIONS:

Compressor (Single)

Generators

Welding Machines, Gas, Diesel, Or Electric Converters of any type-single

Welding System, Multiple (Rectifier Transformer Type)

Effective Dates:

01/01/2019			07/01/2019
Rate	Fringe	Total	Total
45.39	32.85	78.24	80.59

CLASSIFICATIONS:

Assistant Engineer/Oiler

Drillers Helper

Field Engineer - Transit/Instrument Man

Maintenance Apprentice (Deckhand)

Maintenance Apprentice (Oiler)

Off Road Back Dump

Effective Dates:

01/01/2019			07/01/2019
Rate	Fringe	Total	Total
52.96	32.85	85.81	88.16

CLASSIFICATIONS:

Lead Engineer, Foreman Engineer, Safety Engineer (Minimum)

Effective Dates:

01/01/2019			07/01/2019
Rate	Fringe	Total	Total
42.35	32.85	75.20	77.55

CLASSIFICATIONS:

Field Engineer - Rodman or Chainman

TERRITORY
ENTIRE STATE

NEW JERSEY DEPARTMENT OF LABOR AND WORKFORCE DEVELOPMENT
PREVAILING WAGE RATE DETERMINATION

STRUCTURAL STEEL ERECTION Rates Expiration Date :

Effective Dates:

01/01/2019			07/01/2019
Rate	Fringe	Total	Total
48.68	32.85	81.53	83.88

CLASSIFICATIONS:

Aerial Platform Used On Hoists

Apprentice Engineer/Oiler with Compressor or Welding Machine

Captain (Power Boats)

Compressor (2 or 3 in battery)

Concrete Cleaning/Decontamination Machine Operator

Conveyor or Tugger Hoist

Directional Boring Machine

Elevator or House Car

Fireman

Forklift

Generator (2 or 3)

Heavy Equipment Robotics, Operator/Technician

Maintenance Utility Man

Master Environmental Maintenance Technician

Tug Master (Power Boats)

Ultra High Pressure Waterjet Cutting Tool System Operator/Maintenance Technician

Vacuum Blasting Machine Operator/Maintenance Technician

Welding Machines, Gas or Electric Converters on any type-2 or 3 in battery including diesels

TERRITORY

ENTIRE STATE

NEW JERSEY DEPARTMENT OF LABOR AND WORKFORCE DEVELOPMENT

PREVAILING WAGE RATE DETERMINATION

STRUCTURAL STEEL ERECTION **Rates Expiration Date :**

Effective Dates:

	01/01/2019		**07/01/2019**
Rate	Fringe	Total	Total
51.34	32.85	84.19	86.54

CLASSIFICATIONS:

A-Frame

Cherry Picker -10 tons or less (Over 10 tons use crane rate)

Hoist (all types Except Chicago-boom)

Jack (screw, air hydraulic, power-operated unit or console type, Except hand jack or pile load test type)

Side Boom

Straddle Carrier

TERRITORY

ENTIRE STATE

NEW JERSEY DEPARTMENT OF LABOR AND WORKFORCE DEVELOPMENT

PREVAILING WAGE RATE DETERMINATION

STRUCTURAL STEEL ERECTION **Rates Expiration Date :**

{For apprentice rates refer to "Operating Engineers" apprentice rates in any county rate package}

The regular workday consists of 8 hours, Monday to Friday, between 6:00 AM and 4:30 PM.

SHIFT DIFFERENTIALS:
- Shift work must run for 5 consecutive workdays.
- When 2 shifts are worked, the second shift shall receive an additional 10% of the regular rate inclusive of benefits, per hour.
- When 3 shifts are worked, the second shift shall receive 8 hours pay for 7.5 hours of work, plus an additional 10% of the regular rate inclusive of benefits, per hour. The third shift shall receive 8 hours pay for 7 hours of work, plus an additional 15% of the regular rate inclusive of benefits, per hour.
- When such hours are mandated by the project owner, a shift that starts between 8:00 PM and midnight and ends by 6:00 AM Saturday, or that starts after 8:00 PM on Sunday, provided there are consecutive hours of work within the shift, shall receive an additional 15% of the regular rate, inclusive of benefits.
- On Highway, Road, Street, and Sewer projects irregular shifts starting between 5:00 PM and 12:00 AM may be worked Monday through Friday, and shall receive an additional 15% of the regular rate, inclusive of benefits. When working with other trades that receive a higher irregular shift rate, the Operating Engineer shall also receive the higher irregular shift rate.

OVERTIME:
- Hours in excess of 8 per day, or outside of the regular workday, Monday through Friday, that are not shift work, and all hours on Saturdays shall be paid at time and one-half the regular rate, inclusive of benefits. All hours on Sundays and holidays shall be paid at double the regular rate, inclusive of benefits.
- Four 10-hour days may be worked, Monday through Thursday, at straight time, with all hours on Friday paid at time and one-half the regular rate, inclusive of benefits.

RECOGNIZED HOLIDAYS: New Year's Day, Presidents' Day, Memorial Day, July 4th, Labor Day, Presidential Election Day, Veterans Day, Thanksgiving Day, Christmas Day. Sunday holidays observed the following Monday. When all trades on a particular job site agree, the day after Thanksgiving may be substituted for Veteran's Day.

On hazardous waste removal work or asbestos removal work, on a state or federally designated hazardous waste site, where the operating engineer is in direct contact with hazardous material and when personal protective equipment is required for respiratory, skin, and eye protection, the operating engineer shall receive an additional 20% of the hourly wage, per hour.

Effective Dates:

	01/01/2019		07/01/2019
Rate	Fringe	Total	Total
55.40	32.85	88.25	90.60

CLASSIFICATIONS:

Helicopter Co-Pilot & Communications Engineer

OPERATING ENGINEERS **Rates Expiration Date :**

Effective Dates:

	01/01/2019		07/01/2019
Rate	Fringe	Total	Total
53.77	32.85	86.62	88.97

CLASSIFICATIONS:

Cranes, Derricks, Pile Driver (all types) , under 100 tons with a boom (including jib and/or leads) 140 ft. and over

Effective Dates:

	01/01/2019		07/01/2019
Rate	Fringe	Total	Total
56.27	32.85	89.12	91.47

CLASSIFICATIONS:

Cranes, Derricks, Pile Driver (all types), 100 tons and over and TOWER CRANE with a boom (including jib and/or leads) under 100 ft.

Effective Dates:

	01/01/2019		07/01/2019
Rate	Fringe	Total	Total
52.77	32.85	85.62	87.97

CLASSIFICATIONS:

Cranes, Derricks, Pile Driver (all types), under 100 tons with a boom (including jib and/or leads) from 100 ft. to 139 ft.

OPERATING ENGINEERS **Rates Expiration Date :**

Effective Dates:

	01/01/2019		07/01/2019
Rate	Fringe	Total	Total
46.64	32.85	79.49	81.84

CLASSIFICATIONS:

Steam Generator or Boiler

Stone Spreader

Tamping Machine (vibrating ride-on type)

Temporary Heating Plant (Nelson or other type, including proprane, natural gas, and flow-type units)

Water or Sprinkler Truck

Welding Machine (gas, diesel, or electric convertor, of any type)

Welding System - Multiple (rectifier transformer type)

Wellpoint Systems (including installation by bull gang and maintenance)

Effective Dates:

	01/01/2019		07/01/2019
Rate	Fringe	Total	Total
53.59	32.85	86.44	88.79

CLASSIFICATIONS:

Helicoptor Pilot/Engineer

Effective Dates:

	01/01/2019		07/01/2019
Rate	Fringe	Total	Total
58.27	32.85	91.12	93.47

CLASSIFICATIONS:

Cranes, Derricks, Pile Driver (all types), 100 tons and over and TOWER CRANE with boom (including jib and/or leads) 140 ft. and over

Effective Dates:

	01/01/2019		07/01/2019
Rate	Fringe	Total	Total
57.27	32.85	90.12	92.47

CLASSIFICATIONS:

Cranes, Derricks, Pile Driver (all types), 100 tons and over and TOWER CRANE with boom (including jib and/or leads) from 100 ft. to 139 ft.

OPERATING ENGINEERS **Rates Expiration Date :**

Effective Dates:

01/01/2019			07/01/2019
Rate	Fringe	Total	Total
46.64	32.85	79.49	81.84

CLASSIFICATIONS:

Chipper

Compressor (single)

Concrete Spreader (small type)

Conveyor Loader (Except elevator graders)

Engines, Large Diesel (1620 HP) & Staging Pump

Farm Tractor

Fertilizing Equipment (operation & maintenance)

Fine Grade Machine (small type)

Form Line Grader (small type)

Front End Loader (under 1 cubic yard)

Generator (single)

Grease, Gas, Fuel, & Oil Supply Trucks

Heaters (Nelson or other type)

Lights - portable generating light plant

Mixer, Concrete (small)

Mulching Equipment (operation & maintenance)

Power Broom or Sweeper

Pump (diesel engine & hydraulic - regardless of power)

Pump (larger than 2 inch suction, including submersible pumps)

Road Finishing Machine (small type)

Roller - grade, fill, or stone base

Seeding Equipment (operation & maintenance)

Sprinkler & Water Pump Trucks

TERRITORY

ENTIRE STATE

NEW JERSEY DEPARTMENT OF LABOR AND WORKFORCE DEVELOPMENT

PREVAILING WAGE RATE DETERMINATION

OPERATING ENGINEERS Rates Expiration Date :

Effective Dates:

	01/01/2019		07/01/2019
Rate	Fringe	Total	Total
51.77	32.85	84.62	86.97

CLASSIFICATIONS:

Pavement & Concrete Breaker (Superhammer & Hoe Ram)

Pile Driver

Prentice Truck

Roadway Surface Grinder

Scooper (loader & shovel)

Shovel (Excavator)

Trackhoe (Excavator)

Tree Chopper with boom

Trenching Machine (cable plow)

Tunnel Boring Machine

Vacuum Truck

TERRITORY

ENTIRE STATE

NEW JERSEY DEPARTMENT OF LABOR AND WORKFORCE DEVELOPMENT

PREVAILING WAGE RATE DETERMINATION

OPERATING ENGINEERS **Rates Expiration Date :**

Effective Dates:

	01/01/2019		07/01/2019
Rate	Fringe	Total	Total
51.77	32.85	84.62	86.97

CLASSIFICATIONS:

Autograde Pavement Profiler (CMI & similar types)

Autograde Pavement Profiler - Recycle Type (CMI & similar types)

Autograde Placer/Trimmer/Spreader Combination (CMI & similar types)

Autograde Slipform Paver (CMI & similar types)

Backhoe (Excavator)

Central Power Plant

Concrete Paving Machine

Cranes, Derricks, Pile Drivers (all types), under 100 tons with a boom (including jib and/or leads) under 100 ft.

Draglines

Drill, Bauer, AMI and similar types

Drillmaster, Quarrymaster

Drillmaster/Quarrymaster (down-the-hole drill), rotary drill, self-propelled hydraulic drill, self-powered drill

Elevator Grader

Field Engineer-Chief of Party

Front End Loader (5 cu. yards or larger)

Gradall

Grader, Rago

Helicoptor Co-Pilot

Helicoptor Communications Engineer

Juntann Pile Driver

Locomotive (large)

Mucking Machine

TERRITORY

ENTIRE STATE

NEW JERSEY DEPARTMENT OF LABOR AND WORKFORCE DEVELOPMENT

PREVAILING WAGE RATE DETERMINATION

OPERATING ENGINEERS Rates Expiration Date :

Effective Dates:

01/01/2019			07/01/2019
Rate	Fringe	Total	Total
52.51	32.85	85.36	87.71

CLASSIFICATIONS:

Lead Engineer, Foreman Engineer, Safety Engineer (minimum)

OPERATING ENGINEERS **Rates Expiration Date :**

Effective Dates:

01/01/2019			07/01/2019
Rate	Fringe	Total	Total
48.27	32.85	81.12	83.47

CLASSIFICATIONS:

Tug Captains

Tug Master (Power Boats)

Ultra High Pressure Waterjet Cutting Tool System - Operator/Maintenance Technician

Vacuum Blasting Machine - Operator/Maintenance Technician

Vibrating Plant (used with unloading)

Welder & Repair Mechanic

Effective Dates:

01/01/2019			07/01/2019
Rate	Fringe	Total	Total
44.93	32.85	77.78	80.13

CLASSIFICATIONS:

Assistant Engineer/Oiler

Driller's Helper

Field Engineer - Transit man or Instrument man

Maintenance Apprentice (Deckhand)

Maintenance Apprentice (Oiler)

Mechanic's Helper

Off Road Back Dump

Tire Repair & Maintenance

Effective Dates:

01/01/2019			07/01/2019
Rate	Fringe	Total	Total
42.35	32.85	75.20	77.55

CLASSIFICATIONS:

Field Engineer - Rodman or Chainman

TERRITORY
ENTIRE STATE

NEW JERSEY DEPARTMENT OF LABOR AND WORKFORCE DEVELOPMENT
PREVAILING WAGE RATE DETERMINATION

OPERATING ENGINEERS Rates Expiration Date :

Effective Dates:

	01/01/2019		07/01/2019
Rate	Fringe	Total	Total
48.27	32.85	81.12	83.47

CLASSIFICATIONS:

Laddervator

Locomotive (Dinky-type)

Maintenance Utility Man

Master Environmental Maintenance Technician

Mechanic

Mixer (Except paving mixers)

Pavement Breaker (truck-mounted or small self-propelled ride-on type)

Pavement Breaker - maintenance of compressor or hydraulic unit

Pipe Bending Machine (power)

Pitch Pump

Plaster Pump (regardless of size)

Post Hole Digger (post pounder, auger)

Rod Bending Machines

Roller (black top)

Scale (power)

Seamen Pulverizing Mixer

Shoulder Widener

Silo

Skimmmer Machine (boom type)

Steel Cutting Machine (service & maintenance)

Tamrock Drill

Tractor

Transfer Machines

TERRITORY
ENTIRE STATE

NEW JERSEY DEPARTMENT OF LABOR AND WORKFORCE DEVELOPMENT
PREVAILING WAGE RATE DETERMINATION

OPERATING ENGINEERS **Rates Expiration Date :**

Effective Dates:

	01/01/2019		07/01/2019
Rate	Fringe	Total	Total
48.27	32.85	81.12	83.47

CLASSIFICATIONS:

Conveyors - under 125 feet

Crane Signalman

Crushing Machine

Directional Boring Machine

Ditching Machine - Small (Ditchwitch, Vermeer or similar types)

Dope Pot - Mechanical (with or without pump)

Dumpster

Elevator

Fireman

Fork Lift (Economobile, Lull & similar types)

Front End Loader (1 cu. yd. and over but less than 2 cu. yds.)

Generator (2 or 3 battery)

Giraffe Grinder

Goldhofer/Hydraulic Jacking Trailer

Grader & Motor Patrols

Grout Pump

Gunnite Machine (Excluding nozzle)

Hammer - Vibratory (in conjunction with generator)

Heavy Equipment Robotics - Operator/Technician

Hoist (roof, tugger, aerial platform hoist, house car)

Hopper

Hopper Doors (power operated)

Ladder (motorized)

TERRITORY
ENTIRE STATE

NEW JERSEY DEPARTMENT OF LABOR AND WORKFORCE DEVELOPMENT
PREVAILING WAGE RATE DETERMINATION

OPERATING ENGINEERS **Rates Expiration Date :**

Effective Dates:

01/01/2019			07/01/2019
Rate	Fringe	Total	Total
48.27	32.85	81.12	83.47

CLASSIFICATIONS:

Asphalt Curbing Machine

Asphalt Plant Engineer

Asphalt Spreader

Autograde Curb Trimmer & Sidewalk Shoulder Slipform (CMI & similar types)

Autograde Curecrete Machine (CMI & similar types)

Autograde Tube Finisher & Texturing Machine (CMI & similar types)

Bar Bending Machines (Power)

Batcher, Batching Plant, & Crusher [On Site]

Belt Conveyor System

Boom-Type Skimmer Machine

Bridge Deck Finisher

Bulldozer (all sizes)

Captain (Power Boats)

Car Dumper (railroad)

Compressor & Blower unit for loading/unloading of concrete, cement, fly ash, or similar type materials (used independently or truck-mounted)

Compressor (2 or 3 battery)

Concrete Breaking Machine

Concrete Cleaning/Decontamination Machine

Concrete Finishing Machine

Concrete Saw or Cutter (ride-on type)

Concrete Spreader (Hetzel, Rexomatic & similar types)

Concrete Vibrator

OPERATING ENGINEERS **Rates Expiration Date :**

Effective Dates:

	01/01/2019		07/01/2019
Rate	Fringe	Total	Total
50.18	32.85	83.03	85.38

CLASSIFICATIONS:

Jack (screw, air hydraulic, power-operated unit, or console type, Except hand jack or pile load test type)

Log Skidder

Pan

Paver, concrete

Plate & Frame Filter Press

Pumpcrete (unit type)

Pumpcrete, Squeezecrete, or Concrete Pumping machine (regardless of size)

Scraper

Side Boom

Straddle Carrier (Ross and similar types)

Whiphammer

Winch Truck (hoisting)

TERRITORY

ENTIRE STATE

NEW JERSEY DEPARTMENT OF LABOR AND WORKFORCE DEVELOPMENT

PREVAILING WAGE RATE DETERMINATION

OPERATING ENGINEERS Rates Expiration Date :

Effective Dates:

	01/01/2019		07/01/2019
Rate	Fringe	Total	Total
50.18	32.85	83.03	85.38

CLASSIFICATIONS:

A-Frame

Backhoe (combination)

Boom Attachment on loaders (Except pipehook)

Boring & Drilling Machine

Brush Chopper, Brush Shredder, Tree Shredder, Tree Shearer

Bulldozer, finish grade

Cableway

Carryall

Concrete Pump

Concrete Pumping System (Pumpcrete & similar types)

Conveyor, 125 feet or longer

Drill Doctor (Duties include dust collector and maintenance)

Front End Loader (2 cu. yds. but less than 5 cu. yds.)

Grader, finish

Groove Cutting Machine (ride-on type)

Heater Planer

Hoist: Outside Material Tower Hoist (all types including steam, gas, diesel, electric, air hydraulic, single and double drum, concrete, brick shaft caisson, snorkle roof, and other similar types, Except Chicago-boom type) * receives an addtional $1.00 per hour on 100 ft. up to 199 ft. total height, and an additional $2.00 per hour on 200 ft. and over total height.

Hydraulic Crane (10 tons & under)

Hydraulic Dredge

Hydro-Axe

Hydro-Blaster

TERRITORY

ENTIRE STATE

NEW JERSEY DEPARTMENT OF LABOR AND WORKFORCE DEVELOPMENT

PREVAILING WAGE RATE DETERMINATION

OPERATING ENGINEERS **Rates Expiration Date :**

{For apprentice rates refer to "Operating Engineers" apprentice rates in any county rate package}

The regular workday consists of 8 hours, Monday to Friday, between 6:00 AM and 4:30 PM.

SHIFT DIFFERENTIALS:
- Shift work must run for 5 consecutive workdays.
- When 2 shifts are worked, the second shift shall receive an additional 10% of the regular rate inclusive of benefits, per hour.
- When 3 shifts are worked, the second shift shall receive 8 hours pay for 7.5 hours of work, plus an additional 10% of the regular rate inclusive of benefits, per hour. The third shift shall receive 8 hours pay for 7 hours of work, plus an additional 15% of the regular rate inclusive of benefits, per hour.
- When such hours are mandated by the project owner, a shift that starts between 8:00 PM and midnight and ends by 6:00 AM Saturday, or that starts after 8:00 PM on Sunday, provided there are consecutive hours of work within the shift, shall receive an additional 15% of the regular rate, inclusive of benefits.
- On Highway, Road, Street, and Sewer projects irregular shifts starting between 5:00 PM and 12:00 AM may be worked Monday through Friday, and shall receive an additional 15% of the regular rate, inclusive of benefits. When working with other trades that receive a higher irregular shift rate, the Operating Engineer shall also receive the higher irregular shift rate.

OVERTIME:
- Hours in excess of 8 per day, or outside of the regular workday, Monday through Friday, that are not shift work, and all hours on Saturdays shall be paid at time and one-half the regular rate, inclusive of benefits. All hours on Sundays and holidays shall be paid at double the regular rate, inclusive of benefits.
- Four 10-hour days may be worked, Monday through Thursday, at straight time, with all hours on Friday paid at time and one-half the regular rate, inclusive of benefits.

RECOGNIZED HOLIDAYS: New Year's Day, Presidents' Day, Memorial Day, July 4th, Labor Day, Presidential Election Day, Veterans Day, Thanksgiving Day, Christmas Day. Sunday holidays observed the following Monday. When all trades on a particular job site agree, the day after Thanksgiving may be substituted for Veteran's Day.

On hazardous waste removal work or asbestos removal work, on a state or federally designated hazardous waste site, where the operating engineer is in direct contact with hazardous material and when personal protective equipment is required for respiratory, skin, and eye protection, the operating engineer shall receive an additional 20% of the hourly wage, per hour.

STATEWIDE RATES

NEW JERSEY DEPARTMENT OF LABOR AND WORKFORCE DEVELOPMENT

PREVAILING WAGE RATE DETERMINATION

County - MERCER

Craft: Welder **PREVAILING WAGE RATE**

Welder

Craft: Welder **COMMENTS/NOTES**

Welders rate is the same as the craft to which the welding is incidental.

NEW JERSEY DEPARTMENT OF LABOR AND WORKFORCE DEVELOPMENT

PREVAILING WAGE RATE DETERMINATION

County - MERCER

Craft: Truck Driver-Material Delivery Driver **PREVAILING WAGE RATE**

	11/01/18
Driver	W33.01 B32.38 T65.39
New Hires: 1st Year	W33.01 B32.38 T65.39

Craft: Truck Driver-Material Delivery Driver **COMMENTS/NOTES**

NOTE: These rates may only be used for the delivery of materials to the jobsite.

OVERTIME: Hours in excess of 8 per day, Monday through Friday, and all hours on Saturdays shall be paid at time and one-half the hourly rate. All hours on Sundays and holidays shall be paid at double the hourly rate. Benefits on overtime shall be $37.33, As of 11-1-18, benefits on overtime shall be $37.93.

RECOGNIZED HOLIDAYS: New Year's Day, Washington's Birthday, Memorial Day, July 4th, Labor Day, Presidential Election Day, Veterans's Day, Thanksgiving Day, Christmas Day. Veteran's Day may be substituted for the day after Thanksgiving. Sunday holidays will be observed the following Monday.

"blended rate" which shall be 80% of the above-listed wage rates, plus the full benefit rate. This rate shall be used when the driver "round robins" for a minimum of 6 hours during the work day.

OVERTIME:
- Hours in excess of 8 per day, or before or after the regular workday that are not shift work, Monday through Friday, and all hours on Saturdays shall be paid at time and one-half the hourly rate. All hours on Sundays and holidays shall be paid at double the hourly rate.
- Benefits on overtime shall be $37.33. As of 11-1-18, benefits on overtime shall be $37.93.
- Four 10-hour days may be worked, Monday through Thursday, at straight time, with Friday used as a make-up day for a day lost to inclement weather. If Friday is not a make-up day, all hours on Friday shall be paid at time and one-half the hourly rate.

RECOGNIZED HOLIDAYS: New Year's Day, Presidents' Day, Memorial Day, July 4th, Labor Day, Presidential Election Day, Veteran's Day, Thanksgiving Day, Christmas Day. Veteran's Day may be substituted for the day after Thanksgiving. Sunday holidays will be observed the following Monday.

NEW JERSEY DEPARTMENT OF LABOR AND WORKFORCE DEVELOPMENT

PREVAILING WAGE RATE DETERMINATION

County - MERCER

Craft: Truck Driver **PREVAILING WAGE RATE**

	11/01/18
Bucket, Utility, Pick-up, Fuel Delivery trucks	W40.95 B32.38 T73.33
Dump truck (single axle), Asphalt Distributor, Tack Spreader	W40.95 B32.38 T73.33
Euclid-type vehicles (large off-road equipment)	W41.10 B32.38 T73.48
Helper on Asphalt Distributor truck	W40.95 B32.38 T73.33
Slurry Seal, Seeding/Fertilizing/Mulching truck	W40.95 B32.38 T73.33
Straight 3-axle trucks, Dump Truck (3-axle), Dump Truck (tandem)	W41.00 B32.38 T73.38
Tractor-Trailer truck (all types)	W41.10 B32.38 T73.48
Vacuum or Vac-All truck (entire unit)	W40.95 B32.38 T73.33
Winch Trailer Driver	W41.20 B32.38 T73.58

Craft: Truck Driver **COMMENTS/NOTES**

Foreman: + $.75 cents per hour. Overtime rate shall be increased accordingly.

HAZARDOUS WASTE REMOVAL WORK:
- On a hazardous waste site requiring Level A, B, or C personal protection for any worker: + $3.00 per hour.
- On a hazardous waste site not designated Level A, B, or C: + $1.00 per hour.

The regular workday consists of 8 hours starting between 6:00 AM and 8:00 AM.

SHIFT DIFFERENTIAL:
Any shift starting at a time other than 6:00 AM or 8:00 AM shall receive an additional $2.50 per hour.

BLENDED RATE:
- When a truck driver is performing work on site and also serving as a material delivery driver, the driver shall be paid a

NEW JERSEY DEPARTMENT OF LABOR AND WORKFORCE DEVELOPMENT

PREVAILING WAGE RATE DETERMINATION

County - MERCER

Craft: Tile Setter - Mosaic & Terrazzo **PREVAILING WAGE RATE**

	01/01/19
Grinder or Assistant	W54.24 B36.03 T90.27
Mechanic	W55.84 B36.05 T91.89
Terrazzo Resinous Worker	W46.57 B29.20 T75.77

Craft: Tile Setter - Mosaic & Terrazzo **APPRENTICE RATE SCHEDULE**

INTERVAL	PERIOD AND RATES									
750 Hours	50%	55%	60%	65%	70%	75%	85%	95%	100%	

Ratio of Apprentices to Journeymen - 1:5

Craft: Tile Setter - Mosaic & Terrazzo **COMMENTS/NOTES**

APPRENTICE RATE SCHEDULE FOR THOSE APPRENTICES ENTERING PROGRAM AFTER 7-1-17:

INTERVAL PERIOD AND RATES
1500 Hours 35% 45% 60% 70% 80% 90% 100%

The regular workday consists of 7 hours, between 8:00 AM and 3:30 PM.

OVERTIME:
- Hours in excess of 7 per day, or before or after the regular workday, Monday through Friday, and all hours on Saturdays shall be paid at time and one-half the hourly rate. All hours on Sundays and holidays shall be paid at double the hourly rate.

RECOGNIZED HOLIDAYS: New Year's Day, Presidents' Day, Good Friday, Monday after Easter, Memorial Day, July 4th, Labor Day, Columbus Day, Veterans' Day, Thanksgiving Day and the day after, Christmas Day. Sunday holidays observed the following Monday.

NEW JERSEY DEPARTMENT OF LABOR AND WORKFORCE DEVELOPMENT

PREVAILING WAGE RATE DETERMINATION

County - MERCER

Craft: Tile Setter - Marble **PREVAILING WAGE RATE**

	01/01/19
Tile Setter	W59.03
	B36.82
	T95.85

Craft: Tile Setter - Marble **APPRENTICE RATE SCHEDULE**

INTERVAL	PERIOD AND RATES									
750 Hours	40%	45%	50%	55%	60%	65%	70%	75%	85%	95%

Ratio of Apprentices to Journeymen - 1:4

Craft: Tile Setter - Marble **COMMENTS/NOTES**

OVERTIME:
Hours in excess of 7 per day, Monday through Friday, and the first 7 hours on Saturdays shall be paid at time and one-half the regular rate, inclusive of benefits. Hours in excess of 7 on Saturdays, and all hours on Sundays and holidays shall be paid at double the regular rate, inclusive of benefits.

RECOGNIZED HOLIDAYS: New Year's Day, Presidents' Day, Good Friday, Memorial Day, July 4th, Labor Day, Columbus Day, Veterans' Day, Thanksgiving Day and the day after, Christmas Day. Sunday holidays observed the following Monday.

ELECTRICIAN- UTILITY WORK (NORTH) Rates Expiration Date :

Effective Dates:

12/02/2018			12/01/2019	11/29/2020
Rate	Fringe	Total	Total	Total
58.25	39.02	97.27	99.79	102.32

CLASSIFICATIONS:

Line Foreman

Effective Dates:

12/02/2018			12/01/2019	11/29/2020
Rate	Fringe	Total	Total	Total
42.13	28.22	70.35	72.17	73.99

CLASSIFICATIONS:

Street Light Mechanical Leader

Effective Dates:

12/02/2018			12/01/2019	11/29/2020
Rate	Fringe	Total	Total	Total
40.05	26.83	66.88	68.62	70.34

CLASSIFICATIONS:

Groundman Winch Operator

Effective Dates:

12/02/2018			12/01/2019	11/29/2020
Rate	Fringe	Total	Total	Total
40.05	26.83	66.88	68.62	70.34

CLASSIFICATIONS:

Groundman Truck Operator

Effective Dates:

12/02/2018			12/01/2019	11/29/2020
Rate	Fringe	Total	Total	Total
39.53	26.48	66.01	67.71	69.43

CLASSIFICATIONS:

Street Light Mechanic

Effective Dates:

12/02/2018			12/01/2019	11/29/2020
Rate	Fringe	Total	Total	Total
39.53	26.48	66.01	67.71	69.43

CLASSIFICATIONS:

Line Equipment Mechanic

ELECTRICIAN- UTILITY WORK (NORTH) Rates Expiration Date :

Effective Dates:

12/02/2018			12/01/2019	11/29/2020
Rate	Fringe	Total	Total	Total
33.81	22.65	56.46	57.91	59.38

CLASSIFICATIONS:

Groundman 2nd Year

Effective Dates:

12/02/2018			12/01/2019	11/29/2020
Rate	Fringe	Total	Total	Total
31.21	20.91	52.12	53.47	54.80

CLASSIFICATIONS:

Groundman 1st Year

Effective Dates:

12/02/2018			12/01/2019	11/29/2020
Rate	Fringe	Total	Total	Total
51.49	34.49	85.98	88.22	90.44

CLASSIFICATIONS:

Line Equipment Foreman

ELECTRICIAN- UTILITY WORK (SOUTH) **Rates Expiration Date :**

Electrician-Utility Work (South)
(For apprentice rates refer to Electrician-Utility Work (South) in any county rate package).
These rates apply to work contracted for by the following utility company:
Atlantic City Electric.
These rates do not apply to work on substations or switching stations.
For utility work contracted for by a utility company other than the one listed above or those listed under "Electrician-Utility Work (North), see the "Outside Commercial Rates" for the county in which the jobsite is located.

* FOR OUTSIDE COMMERCIAL RATES PLEASE SEE COUNTY RATES

The regular workday is 8 hours, between 7:00 AM and 4:30 PM.
FOR EMERGENCY WORK ONLY: (emergency work is defined as work caused by storm, catastrophe, act of god, and circumstances beyond the control of the employer)- all hours of work shall be paid at double the hourly rate.
SHIFT DIFFERENTIALS:
Shift work must run for a minimum of 5 consecutive workdays.
When two (2) or three (3) shifts are worked the following shall apply:
1st shift (between the hours of 8:00 AM and 4:30 PM)
2nd shift (between the hours of 4:30 PM and 12:30 AM): 8 hours of work + 10% of the regular rate of pay for 7.5 hours worked.

3rd shift (between the hours of 12:30 AM and 8:00 AM): 8 hours of work + 15% of the regular rate of pay for 7 hours worked.

OVERTIME:
Hours in excess of 8 per day, or before or after the regular wokday Monday through Friday, that is not shift work, and all hours on Saturday shall be paid at time and one-half the regular rate. All hours on Sundays and Holidays shall be paid double the hourly rate.

Four 10-hour days may be worked, at straight time, between 6:00 AM and 6:00 PM, Monday through Thursday with Friday used as a make-up day.

RECOGNIZED HOLIDAYS:
New Year's Day, Memorial Day, July 4th, Labor Day, Veterans' Day, Thanksgiving Day and Christmas Day or on days celebrated.

WORKING RULES:
There shall be a Foreman in charge of each work crew. No crews are to exceed twelve (12) men, including Foremen.

There shall be a General Foreman designated for transmission work when three (3) or more crews are on the same job and for distribution work where there are are more than twenty (20) employees on site.
A small job crew shall consist of five (5) or less employees, one (1) of the Journeyman Linemen in the crew shall be designated as a Small Job Foreman.
Work performed from ladders and/or mechanical lift equipment shall be the work of Linemen and/or Apprentices.
On new construction, fitting and framing poles, towers or structures may be done by Journeymen and/or Apprentices. Groundmen may assist, but may not perform any work which would be performed by Linemen if assembled in the air.
There shall be a Journeyman Lineman in each pole setting, erection, grounding, wire and cable-pulling crew of more than three (3) men.

Effective Dates:

12/02/2018

Rate	Fringe	Total
60.86	48.05	108.91

CLASSIFICATIONS:

General Foreman

ELECTRICIAN- UTILITY WORK (SOUTH) Rates Expiration Date :

Effective Dates:

12/02/2018

Rate	Fringe	Total
54.21	44.12	98.33

CLASSIFICATIONS:

Foreman

Effective Dates:

12/02/2018

Rate	Fringe	Total
51.35	42.44	93.79

CLASSIFICATIONS:

Small Job Foreman

Effective Dates:

12/02/2018

Rate	Fringe	Total
47.55	40.18	87.73

CLASSIFICATIONS:

Heavy Equipment Operator

Effective Dates:

12/02/2018

Rate	Fringe	Total
47.55	40.18	87.73

CLASSIFICATIONS:

Cable Splicer

Effective Dates:

12/02/2018

Rate	Fringe	Total
47.55	40.18	87.73

CLASSIFICATIONS:

Journeyman Lineman

Effective Dates:

12/02/2018

Rate	Fringe	Total
47.55	40.18	87.73

CLASSIFICATIONS:

Journeyman Welder

ELECTRICIAN- UTILITY WORK (SOUTH) **Rates Expiration Date :**

Effective Dates:

12/02/2018

Rate	Fringe	Total
47.55	40.18	87.73

CLASSIFICATIONS:

Journeyman Painter

Effective Dates:

12/02/2018

Rate	Fringe	Total
38.04	34.55	72.59

CLASSIFICATIONS:

Light Equipment Operator

Effective Dates:

12/02/2018

Rate	Fringe	Total
33.29	31.73	65.02

CLASSIFICATIONS:

Groundman Truck Driver

Effective Dates:

12/02/2018

Rate	Fringe	Total
30.91	30.31	61.22

CLASSIFICATIONS:

Groundman 3rd Year

Effective Dates:

12/02/2018

Rate	Fringe	Total
28.53	28.91	57.44

CLASSIFICATIONS:

Groundman 2nd Year

Effective Dates:

12/02/2018

Rate	Fringe	Total
26.15	27.51	53.66

CLASSIFICATIONS:

Groundman 1st Year

TERRITORY

ENTIRE STATE

NEW JERSEY DEPARTMENT OF LABOR AND WORKFORCE DEVELOPMENT

PREVAILING WAGE RATE DETERMINATION

ELECTRICIAN- UTILITY WORK (SOUTH) Rates Expiration Date :

Effective Dates:

12/02/2018

Rate	Fringe	Total
20.92	24.41	45.33

CLASSIFICATIONS:

Flagman

HEAVY & GENERAL LABORERS- NEW TRANS HUDSON TUNNELS **Rates Expiration Date :**

THESE RATES APPLY TO CONSTRUCTION ON NEW TRANS HUDSON TUNNELS ONLY

{For apprentice rates refer to "Laborer - Heavy & General" apprentice rates in any county rate package}

The regular workday consists of 8 hours, starting at 7:00 AM or 8:00 AM.

SHIFT DIFFERENTIALS:
- Shifts must start at 3:00 PM, 4:00 PM, 12:00 AM, or 1:00 AM, to be considered shift work, except when the project owner mandates special hours of work in the job specifications, in which case those hours may be considered shift work.
- When such hours are mandated by the project owner, a shift that begins before midnight on Friday and ends on Saturday morning, or that begins at or after 8:00 PM on Sunday and ends on Monday morning may be paid at the shift differential rate.
- Shifts shall receive an additional $3.00 per hour.

OVERTIME:
- Hours in excess of 8 per day, Monday through Friday, or outside of the regular workday that are not shift work, and all hours on Saturdays, shall be paid at time and one-half the hourly rate. All hours on Sundays and holidays shall be paid at double the hourly rate.
- Four 10-hour days may be worked, Monday through Thursday, at straight time, with Friday used as a make-up day for a day lost to inclement weather. If Friday is not a make-up day, all hours on Friday shall be paid at time and one-half the hourly rate.

RECOGNIZED HOLIDAYS: New Year's Day, Presidents' Day, Memorial Day, July 4th, Labor Day, Presidential Election Day, Veterans' Day, Thanksgiving Day, Christmas Day. Sunday holidays observed the following Monday. Veterans Day may be substituted for the day after Thanksgiving. However, in the trading of Veterans Day for the day after Thanksgiving, if overtime is worked on Veterans Day, it shall be paid at double the hourly rate.

Hazardous Waste Work:
-where Level A, B, or C protection is required: – $3.00/hr
-other Hazardous Waste site: + $1.00/hr

Effective Dates:

	03/01/2019		03/01/2020
Rate	Fringe	Total	Total
66.38	31.53	97.91	101.16

CLASSIFICATIONS:

Walking Boss & Superintendent

Effective Dates:

	03/01/2019		03/01/2020
Rate	Fringe	Total	Total
65.93	31.53	97.46	100.71

CLASSIFICATIONS:

Heading Foreman, Shaft Foreman, Rod Foreman, Electrical Foreman, Rigging Foreman

HEAVY & GENERAL LABORERS- NEW TRANS HUDSON TUNNELS Rates Expiration Date :

Effective Dates:

03/01/2019			03/01/2020
Rate	Fringe	Total	Total
65.18	31.53	96.71	99.96

CLASSIFICATIONS:

Iron Foreman, Caulking Foreman, Form Foreman, Cement Finishing Foreman, Concrete Foreman, Track Foreman, Clean-up Foreman, Grout Foreman

Effective Dates:

03/01/2019			03/01/2020
Rate	Fringe	Total	Total
68.93	31.53	100.46	103.71

CLASSIFICATIONS:

Blaster

Effective Dates:

03/01/2019			03/01/2020
Rate	Fringe	Total	Total
64.35	31.53	95.88	99.13

CLASSIFICATIONS:

Top Labor Foreman

Effective Dates:

03/01/2019			03/01/2020
Rate	Fringe	Total	Total
63.83	31.53	95.36	98.61

CLASSIFICATIONS:

Skilled Men (including Caulker, Powder Carrier, all other skilled men)
Skilled Men (including Miner, Drill Runner, Iron Man, Conveyor Man, Maintenance Man, Safety Miner, Rigger, Block Layer, Cement Finisher, Rod Man)

Effective Dates:

03/01/2019			03/01/2020
Rate	Fringe	Total	Total
63.60	31.53	95.13	98.38

CLASSIFICATIONS:

Semi-Skilled Men (including Bell or Signal Man top or bottom, Form Worker & Mover, Concrete Worker, Shaft Man, Tunnel Laborer, Caulker's Helper, all other semi-skilled)
Semi-Skilled Men (including Miner's Helper, Chuck Tender, Track Man, Nipper, Brake Man, Derail Man, Cable Man, Hose Man, Gravel Man, Form Man)

TERRITORY

ENTIRE STATE

NEW JERSEY DEPARTMENT OF LABOR AND WORKFORCE DEVELOPMENT

PREVAILING WAGE RATE DETERMINATION

HEAVY & GENERAL LABORERS- NEW TRANS HUDSON TUNNELS **Rates Expiration Date :**

Effective Dates:

03/01/2019			03/01/2020
Rate	Fringe	Total	Total
63.00	31.53	94.53	97.78

CLASSIFICATIONS:

All others (including Powder Watchman, Change House Attendant, Top Laborer, Job Steward)

FEDERAL WAGE RATES

General Decision Number: NJ190056 05/10/2019 NJ56

Superseded General Decision Number: NJ20180056

State: New Jersey

Construction Type: Heavy

County: Mercer County in New Jersey.

HEAVY CONSTRUCTION PROJECTS

Note: Under Executive Order (EO) 13658, an hourly minimum wage of $10.60 for calendar year 2019 applies to all contracts subject to the Davis-Bacon Act for which the contract is awarded (and any solicitation was issued) on or after January 1, 2015. If this contract is covered by the EO, the contractor must pay all workers in any classification listed on this wage determination at least $10.60 per hour (or the applicable wage rate listed on this wage determination, if it is higher) for all hours spent performing on the contract in calendar year 2019. If this contract is covered by the EO and a classification considered necessary for performance of work on the contract does not appear on this wage determination, the contractor must pay workers in that classification at least the wage rate determined through the conformance process set forth in 29 CFR 5.5(a)(1)(ii) (or the EO minimum wage rate,if it is higher than the conformed wage rate). The EO minimum wage rate will be adjusted annually. Please note that this EO applies to the above-mentioned types of contracts entered into by the federal government that are subject to the Davis-Bacon Act itself, but it does not apply to contracts subject only to the Davis-Bacon Related Acts, including those set forth at 29 CFR 5.1(a)(2)-(60). Additional information on contractor requirements and worker protections under the EO is available at www.dol.gov/whd/govcontracts.

Modification Number	Publication Date
0	01/04/2019
1	02/15/2019
2	05/10/2019

BRNJ0004-001 05/01/2018

	Rates	Fringes
CEMENT MASON	$ 42.20	32.36

CARP0006-014 11/01/2018

	Rates	Fringes
CARPENTER	$ 49.51	57%

The first sixty feet at the regular rate, 10% per hour additional for each additional fifty feet thereafter.

CARP0715-007 11/01/2018

	Rates	Fringes
Millwright	$ 49.59	58%+.20

Work of erection and dismantling of elevators and towers, such as concrete conveyors and temporary material elevators, scaffolding or other structures to be used as scaffolding inside or outside of buildings: the first sixty feet at the regular rate, 10% per hour additional for each additional fifty feet thereafter.

CARP1556-004 05/01/2014

	Rates	Fringes
CARPENTER (Dock Builder)		
Concrete form work	$ 42.07	40.74
All other work	$ 42.07	40.74

Work on land pile driving, floating marine construction and the construction of wharves, while handling and working with creosote and creosote-impregnated products: $.25 per hour additional.

Work on hazardous/toxic/contaminated waste removal, on a hazardous/toxic/contaminated waste site, where the worker comes into contact with hazardous/toxic/contaminated waste material, and when A, B or C personal protective equipment is required and used for respiratory, skin or eye protection: 20% per hour additional.

ELEC0269-021 01/01/2019

	Rates	Fringes
ELECTRICIAN	$ 50.20	62.48%

ENGI0825-021 07/01/2018

	Rates	Fringes
Power equipment operators:		
GROUP 1	$ 51.77	30.45
GROUP 2	$ 50.18	30.45
GROUP 3	$ 48.27	30.45
GROUP 4	$ 46.64	30.45
GROUP 5	$ 44.93	30.45

Hazardous waste removal work:
Work on a state or federally designated hazardous waste site, where the worker is in direct contact with hazardous material, and when personal protective equipment is

required for respiratory, skin and eye protection: 20% per hour additional.

PAID HOLIDAYS:
New Year's Day, Washington's Birthday observed, Memorial Day, Independence Day, Labor Day, Presidential Election Day, Veteran's Day, Thanksgiving Day and Christmas Day; provided 1) that the worker works three of the preceding five work days before the holiday; or, the work day before the holiday and the work day after the holiday; and, 2) that the worker works the work day before and the work day after the holiday.

DEFINITION OF GROUPS:

GROUP 1:
Backhoe, Including Backhoe Track; Boom; Concrete Paving Machine; Crane (all types, including overhead and straddle traveling type); Drill (down-the-hole drill, rotary drill, self-propelled hydraulic drill, self-powered drill); Elevating Grader; Excavator; Front End Loader (5 cu. yd. and over); Piledriver (length of boom, including length of leads, shall determine premium rate applicable)

GROUP 2:
Backhoe Loader Combo; Concrete Pumper; Grader/Blade (Finish); Hoist; Hydraulic Crane, 10 Tons and under; Front End Loader (2 cu. yd. but less than 5 cu. yd.); Scraper; Side Boom

GROUP 3:
Asphalt Spreader; Bulldozer; Compressor(2 or 3) (in Battery) (within 100 ft.); Crusher; Forklift; Front End Loader (1 cu. yd. and over but less than 2 cu. yd.); Lull; Mechanic; Paver, Asphalt; Roller, Blacktop; Tractor;

GROUP 4:
Broom; Compressor (Single); Farm Tractor; Front End Loader (under 1 cu. yd.); Roller, Grade; Pump

GROUP 5:
Oiler

IRON0068-013 07/01/2016

	Rates	Fringes
IRONWORKER		
Reinforcing	$ 44.55	20.88
Structural, Ornamental, Rigger	$ 46.54	20.88

LABO0172-007 09/01/2018

	Rates	Fringes

Laborers:
Landsacpe Laborer, Power
Tool Operator.....$ 40.00 29.80
Pipelayer.....$ 40.70 29.80

Hazardous waste removal work:
Work on a state or federally designated hazardous waste site, where the worker is required to wear Level A, B or C personal protection: $3.00 per hour additional.

Work on a state or federally designated hazardous waste site, where the worker is not required to wear Level A, B, or C personal protection: $1.00 per hour additional.

PAID HOLIDAYS:
New Year's Day, President's Day, Memorial Day, Independence Day, Labor Day, Presidential Election Day, Veteran's Day, Thanksgiving Day and Christmas Day; provided that the worker works three days for the same employer within a period of ten working days consisting of five working days before and five working days after the day upon which the holiday falls or is observed.

LABO0222-013 07/01/2012

	Rates	Fringes
LABORER		
MASON TENDER:		
Cement/Concrete	$ 29.35	23.07

PAIN0711-023 05/01/2017

	Rates	Fringes
Painters:		
Work on bridges (Major Bridges Designed for Commercial Navigation)	$ 54.13	27.12

PAIN0711-024 05/01/2017

	Rates	Fringes
Painters:		
New Construction		
Brush and roller	$ 40.19	22.72
Repaint work, on projects on which no major alterations occur.		
Brush and roller	$ 29.05	18.91

PLUM0009-023 03/01/2017

MERCER COUNTY (south of a line drawn from the point at which

Rt. 602 (also known as Hopewell - Wertsville Rd.) meets the Hunterdon/Mercer County line; then, south along Rt. 602 (also known as Hopewell - Wertsville Rd.) to the Borough of Hopewell, includes the Borough of Hopewell; then, east along the Reading Railroad to the Mercer/Somerset County line (Province Line Rd.))

	Rates	Fringes
PIPEFITTER	$ 47.47	35.51
Service and Repair	$ 37.48	21.08
PLUMBER	$ 47.47	35.51
Service and Repair	$ 37.48	21.08

PLUM0024-018 05/01/2017

MERCER COUNTY (north of a line drawn from the point at which Rt. 602 (also known as Hopewell - Wertsville Rd.) meets the Hunterdon/Mercer County line; then, south along Rt. 602 (also known as Hopewell - Wertsville Rd.) to the Borough of Hopewell, includes the Borough of Hopewell; then, east along the Reading Railroad to the Mercer/Somerset County line (Province Line Rd.)):

	Rates	Fringes
PLUMBER	$ 52.66	33.54

PLUM0475-017 05/01/2017

MERCER COUNTY (north of a line drawn from point at which Rt. 602 (also known as Hopewell - Wertsville Rd.) meets the Hunterdon/Mercer County line; then, south along Rt. 602 (also known as Hopewell - Wertsville Rd.) to the Borough of Hopewell, includes the Borough of Hopewell; then, east along the Reading Railroad to the Mercer/Somerset County line (Province Line Rd.)):

	Rates	Fringes
PIPEFITTER	$ 48.51	32.50

TEAM0469-008 11/01/2018

	Rates	Fringes
Truck drivers:		
Dump Truck; Flatbed Truck;Pick up truck	$ 40.95	32.385
Off the Road Truck	$ 41.10	32.385

Hazardous waste removal work:
Work on a state or federally designated hazardous waste site, where the worker is in direct contact with hazardous material, and when personal protective equipment is required for respiratory, skin and eye protection: $3.00

per hour additional.

Work on a state or federally designated hazardous waste site, in a zone requiring Level A personal protection for any workers other than the truck driver: $3.00 per hour additional.

Work on a state or federally designated hazardous waste site where the worker is not working in a zone requiring Level A, B or C personal protection: $1.00 per hour additional.

PAID HOLIDAYS:
New Year's Day, President's Day, Decoration Day, Independence Day, Labor Day, Presidential Election Day, Veteran's Day, Thanksgiving Day and Christmas Day.

VACATION PAY CREDIT:
Workers working or receiving pay for 80 days within a year receive one week paid vacation (48 hours); 125 days receive two weeks paid vacation (96 hours); 145 days receive 15 days paid vacation (120 hours); 15 years seniority and 145 days receive 4 weeks paid vacation (160 hours).

SUNJ2004-032 01/02/2009

	Rates	Fringes
LABORER: Common or General.....$	23.75	13.67

WELDERS - Receive rate prescribed for craft performing operation to which welding is incidental.

==========

Note: Executive Order (EO) 13706, Establishing Paid Sick Leave for Federal Contractors applies to all contracts subject to the Davis-Bacon Act for which the contract is awarded (and any solicitation was issued) on or after January 1, 2017. If this contract is covered by the EO, the contractor must provide employees with 1 hour of paid sick leave for every 30 hours they work, up to 56 hours of paid sick leave each year. Employees must be permitted to use paid sick leave for their own illness, injury or other health-related needs, including preventive care; to assist a family member (or person who is like family to the employee) who is ill, injured, or has other health-related needs, including preventive care; or for reasons resulting from, or to assist a family member (or person who is like family to the employee) who is a victim of, domestic violence, sexual assault, or stalking. Additional information on contractor requirements and worker protections under the EO is available at www.dol.gov/whd/govcontracts.

Unlisted classifications needed for work not included within the scope of the classifications listed may be added after

award only as provided in the labor standards contract clauses (29CFR 5.5 (a) (1) (ii)).

The body of each wage determination lists the classification and wage rates that have been found to be prevailing for the cited type(s) of construction in the area covered by the wage determination. The classifications are listed in alphabetical order of "identifiers" that indicate whether the particular rate is a union rate (current union negotiated rate for local), a survey rate (weighted average rate) or a union average rate (weighted union average rate).

Union Rate Identifiers

A four letter classification abbreviation identifier enclosed in dotted lines beginning with characters other than "SU" or "UAVG" denotes that the union classification and rate were prevailing for that classification in the survey. Example: PLUM0198-005 07/01/2014. PLUM is an abbreviation identifier of the union which prevailed in the survey for this classification, which in this example would be Plumbers. 0198 indicates the local union number or district council number where applicable, i.e., Plumbers Local 0198. The next number, 005 in the example, is an internal number used in processing the wage determination. 07/01/2014 is the effective date of the most current negotiated rate, which in this example is July 1, 2014.

Union prevailing wage rates are updated to reflect all rate changes in the collective bargaining agreement (CBA) governing this classification and rate.

Survey Rate Identifiers

Classifications listed under the "SU" identifier indicate that no one rate prevailed for this classification in the survey and the published rate is derived by computing a weighted average rate based on all the rates reported in the survey for that classification. As this weighted average rate includes all rates reported in the survey, it may include both union and non-union rates. Example: SULA2012-007 5/13/2014. SU indicates the rates are survey rates based on a weighted average calculation of rates and are not majority rates. LA indicates the State of Louisiana. 2012 is the year of survey on which these classifications and rates are based. The next number, 007 in the example, is an internal number used in producing the wage determination. 5/13/2014 indicates the survey completion date for the classifications and rates under that identifier.

Survey wage rates are not updated and remain in effect until a new survey is conducted.

Union Average Rate Identifiers

Classification(s) listed under the UAVG identifier indicate that no single majority rate prevailed for those classifications; however, 100% of the data reported for the classifications was union data. EXAMPLE: UAVG-OH-0010 08/29/2014. UAVG indicates that the rate is a weighted union average rate. OH indicates the state. The next number, 0010 in the example, is an internal number used in producing the wage determination. 08/29/2014 indicates the survey completion date for the classifications and rates under that identifier.

A UAVG rate will be updated once a year, usually in January of each year, to reflect a weighted average of the current negotiated/CBA rate of the union locals from which the rate is based.

WAGE DETERMINATION APPEALS PROCESS

1.) Has there been an initial decision in the matter? This can be:

* an existing published wage determination
* a survey underlying a wage determination
* a Wage and Hour Division letter setting forth a position on a wage determination matter
* a conformance (additional classification and rate) ruling

On survey related matters, initial contact, including requests for summaries of surveys, should be with the Wage and Hour Regional Office for the area in which the survey was conducted because those Regional Offices have responsibility for the Davis-Bacon survey program. If the response from this initial contact is not satisfactory, then the process described in 2.) and 3.) should be followed.

With regard to any other matter not yet ripe for the formal process described here, initial contact should be with the Branch of Construction Wage Determinations. Write to:

Branch of Construction Wage Determinations
Wage and Hour Division
U.S. Department of Labor
200 Constitution Avenue, N.W.
Washington, DC 20210

2.) If the answer to the question in 1.) is yes, then an interested party (those affected by the action) can request review and reconsideration from the Wage and Hour Administrator (See 29 CFR Part 1.8 and 29 CFR Part 7). Write to:

Wage and Hour Administrator
U.S. Department of Labor
200 Constitution Avenue, N.W.
Washington, DC 20210

The request should be accompanied by a full statement of the interested party's position and by any information (wage payment data, project description, area practice material, etc.) that the requestor considers relevant to the issue.

3.) If the decision of the Administrator is not favorable, an interested party may appeal directly to the Administrative Review Board (formerly the Wage Appeals Board). Write to:

Administrative Review Board
U.S. Department of Labor
200 Constitution Avenue, N.W.
Washington, DC 20210

4.) All decisions by the Administrative Review Board are final.

==========

END OF GENERAL DECISION

EAST WINDSOR MUNICIPAL UTILITIES AUTHORITY
MERCER COUNTY, NEW JERSEY
WATER MAIN REPLACEMENT
HUNTINGTON DRIVE

CONTRACT NO. 2018-01

SCOPE OF CONTRACT

Work Included

For the unit prices bid on this Contract, the Contractor shall furnish all labor, materials and equipment required for the water main replacement and all else required to meet the intent of this project. The work is located on Huntington Drive and adjacent streets in East Windsor, New Jersey. The work consists of replacing approximately 4,700 linear feet of existing 4-inch and 6-inch ductile iron main with new 10-inch and 8-inch High Density Polyethylene Pipe (HDPE) water main. The work also consists of the milling and repaving for the length of the water main replacement and restoration of affected grass and sidewalk areas as shown on the plans. The project includes the need for uniformed traffic directors. The contract completion period shall be 150 calendar days after receipt of Notice to Proceed.

In general, the work shall include site investigation, site preparation, concrete and masonry work, general construction and final cleanup.

During the course of construction, all subcontractors shall cooperate regarding the use of available facilities and undertake the work within their contract areas of responsibility so as to facilitate the work of other subcontracts. The scheduling of work shall be coordinated by the General Contractor with the review of the Engineer. Time scheduling shall be arranged to enable all subcontractors to work at the same time so far as may be practical. The Contractor shall be responsible for overall construction operations at the site and other subcontractors shall work through him and the Engineer in all matters involving the coordination of the various items of work. Regularly scheduled job meetings shall be held at least twice per month to resolve differences relating to coordination of the various phases of the work. Site cleanup shall be the responsibility of the Contractor and he shall have the cooperation of all subcontractors on the site in this regard.

All existing electrical, heat, gas, telephone, or other utility services to the existing facilities shall be kept in operation at all times during the construction period. A four (4) hour shutdown will be permitted for connections to existing water main.

Brief general descriptions of the various components of the work are set forth in the sections which follow. All work included on the Drawings and in the Specifications shall be completed in full without further compensation than is provided for in the Unit Prices regardless of whether or not such work is specifically mentioned in the Scope of Contract Items following.

Although the contract is a single overall construction contract, the Specifications describe construction operations in various standard broad work categories. The general construction work shall include in general, site excavation and backfill, environmental protection and restoration, concrete and masonry work, general construction, and final clean-up.

Site improvements shall include the construction of paved roads, excavation, grading, subgrade preparation, bituminous concrete stabilized base course, and bituminous concrete surface course; concrete curbs, walks, landscaping and other site work.

All coordination between the various trades shall be the Contractor's responsibility and he shall provide services of competent professionals to provide this coordination function to the extent of preparing necessary coordination drawings which interrelate with the approved shop drawings.

BID

Table of Contents

	Page
Bidder Declaration	B-1
Bid Items	B-2
Ownership Disclosure Statement	B-14
Contractor's Certification	B-17
Certification of Nonsegregated Facilities	B-28
Listing of Subcontractors to be Used	B-29
Non-Collusion Affidavit	B-30
Certification of Bidders Status	B-31
Requirement for Certificate of Surety	B-32
Certificate of Surety	B32
Bid Bond	B-34
Equipment Certification	B-36
Disclosure of Contributions to New Jersey Law Enforcement Commission (ELEC)	B-38
Document Submission Checklist	B-41

BID
to the

EAST WINDSOR MUNICIPAL UTILITIES AUTHORITY
MERCER COUNTY, NEW JERSEY
WATER MAIN REPLACEMENT - HUNTINGTON DRIVE

CONTRACT NO. 2018-01

THE UNDERSIGNED, as bidder, declares that the only persons or parties interested in the Bid as principals are named on Ownership Disclosure Statement; that the Bid is in all respects fair and without collusion or fraud; that he has carefully examined the annexed proposed form of Contract, the Specifications, the Contract Drawings, and the Information for Bidders; that he, or his representative, has made a personal inspection of the site of the proposed work; and that he proposes and agrees that if this Bid is accepted, he will contract with the East Windsor Municipal Utilities Authority in the form of contract hereto annexed, to provide the necessary machinery, tools, apparatus, and other means of construction, and to furnish all the materials, equipment and labor specified in the Contract in the manner and time therein specified, and according to the requirements of the Engineer as therein set forth, and that he will take in full payment therefore the following prices, to wit:

BID
to the
EAST WINDSOR MUNICIPAL UTILITIES AUTHORITY
MERCER COUNTY, NEW JERSEY
WATER MAIN REPLACEMENT
HUNTINGTON DRIVE

CONTRACT NO. 2018-01

SCHEDULE OF BID ITEMS

AMOUNT

ITEM 1 FOR FURNISHING AND INSTALLING HIGH DENSITY POLYETHYLENE MAINS (INCLUDING ALL EXCAVATING, BACKFILL WITH SUITABLE EXCAVATED MATERIAL CONNECTING, REMOVING OF EXISTING PIPE, AND ALL INCIDENTAL WORK)

Item 1a For 6-inch Diameter HDPE Water Main

15 LF @ $_____Per LF $_____

_____
(Write Unit Price)

Item 1b For 8-inch Diameter HDPE Water Mains

665 LF @ $_____Per LF $_____

_____
(Write Unit Price)

Item 1c For 10-inch Diameter HDPE Water Mains

4,000 LF @ $_____Per LF $_____

_____
(Write Unit Price)

ITEM 2 FOR FURNISHING AND INSTALLING HIGH DENSITY POLYETHYLENE FITTINGS AND COUPLINGS (INCLUDING EXCAVATION, BACKFILL WITH SUITABLE EXCAVATED MATERIAL, CONNECTING, BLOCKING AND ALL INCIDENTAL WORK)

420 LBS @ $_____Per LB $ _____

_____
(Write Unit Price)

ITEM 3 FOR FURNISHING AND INSTALLING CEMENT LINED DUCTILE IRON PIPE (INCLUDING EXCAVATING, BACKFILL WITH SUITABLE EXCAVATED MATERIAL, CONNECTING, REMOVING OF EXISTING PIPE, AND ALL INCIDENTAL WORK)

Item 3a For Furnishing and Installing 10-inch Diameter Cement Lined Ductile Iron Pipe

45 LF @ $_____Per LF $ _____

_____
(Write Unit Price)

Item 3b For Furnishing and Installing 12-inch Diameter Cement Lined Ductile Iron Pipe

45 LF @ $_____Per LF $ _____

_____
(Write Unit Price)

ITEM 4 FOR FURNISHING AND INSTALLING CEMENT LINED DUCTILE IRON FITTINGS AND FLEXIBLE COUPLINGS (INCLUDING EXCAVATION, BACKFILL WITH SUITABLE EXCAVATED MATERIAL, CONNECTING, BLOCKING AND ALL INCIDENTAL WORK)

750 LBS @ $_____Per LB $ _____

_____
(Write Unit Price)

ITEM 5 FOR FURNISHING AND INSTALLING GATE VALVES

Item 5a For 6-inch Diameter Gate Valves

1 Units @ $_____Each $ _____

_____
(Write Unit Price)

Item 5b For 8-inch Diameter Gate Valves

19 Units @ $_____Each $ _____

_____
(Write Unit Price)

Item 5c For 10-inch Diameter Gate Valves

26 Units @ $_____Each $ _____

_____
(Write Unit Price)

Item 5d For 12-inch Diameter Gate Valves

3 Units @ $_____Each $ _____

_____
(Write Unit Price)

ITEM 6 FOR FURNISHING AND INSTALLING FIRE HYDRANTS

15 Unit @ $_____Each $ _____

_____
(Write Unit Price)

ITEM 7 FOR INSTALLATION OF SERVICES

Item 7a For Installation of 1-Inch Services to Curb Valves
146 Units @ $_____Per Unit $ _____

_____
(Write Unit Price)

Item 7b For 1-inch Service Connection to Existing Service Line
600 LF @ $_____Per LF $ _____

_____
(Write Unit Price)

Item 7c For Installation of 2-Inch Services to Existing Meter Pits
12 Units @ $_____Per Unit $ _____

_____
(Write Unit Price)

ITEM 8 FOR EXCAVATION IN TRENCHES AT DEPTHS
IN EXCESS OF 8 FEET AND FOR TEST PITS

10 Cu. Yds. @ $_____Per Cu. Yd. $ _____

_____
(Write Unit Price)

ITEM 9 FOR FURNISHING AND PLACING DENSE GRADED
AGGREGATE (QUARRY- PROCESSED STONE)

1,400 Cu. Yds. @ $_____Per Cu. Yd. $ _____

_____
(Write Unit Price)

ITEM 10 FOR FURNISHING AND PLACING BANK
RUN SAND AND GRAVEL

Item 10a For Bank Run Sand Bedding

300 Cu. Yds. @ $_____Per Cu. Yd. $ _____

_____
(Write Unit Price)

Item 10b For Bank Run Sand and Gravel Backfill

1,000 Cu. Yds. @ $_____Per Cu. Yd. $ _____

_____
(Write Unit Price)

ITEM 11 FOR PAVEMENT REPLACEMENT

Item 11a For Temporary Pavement Replacement in Municipal Roads

3,200 SY @ $_____Per SY $ _____

_____
(Write Unit Price)

Item 11b For Milling and Permanent Pavement Replacement in Municipal Roads

1,700 Sq. Yds. @ $_____Per Sq. Yd. $ _____

_____
(Write Unit Price)

ITEM 12 FOR CURBING REPLACEMENT

100 LF @ $_____Per LF $ _____

_____
(Write Unit Price)

ITEM 13 FOR SIDEWALK REPLACEMENT

Item 13a For Temporary Bituminous Concrete Sidewalk

100 Sq. Yds. @ $_____Per Sq. Yd. $ _____

_____
(Write Unit Price)

Item 13b For Permanent Concrete Sidewalk

100 Sq. Yds. @ $_____Per Sq. Yd. $ _____

_____
(Write Unit Price)

ITEM 14 FOR TOPSOILING, FERTILIZING, SEEDING EXISTING LAWNS AND/OR IMPROVED AREAS

1,300 S.Y. @ $ _____ PER S.Y. $ _____

_____
(Write Unit Price)

ITEM 15 FOR MOBILIZATION

FOR THE LUMP SUM PRICE OF: $ _____

_____
(Write Lump Sum Price)

ITEM 16 FOR THE TRAFFIC CONTROL ALLOWANCE $ 10,000.00

Ten Thousand Dollars

ITEM 18 FOR THE ALLOWANCE OF
ASPHALT PRICE ADJUSTMENT (if and when required) $ 5,000.00

Five Thousand Dollars

ITEM 19 FOR THE ALLOWANCE OF
FUEL PRICE ADJUSTMENT (if and when required) $ 5,000.00

Five Thousand Dollars

TOTAL BASE BID (Items 1 through 18 inclusive) $_____

_____
(WRITE TOTAL BASE BID in Words and Numbers)

ASPHALT CEMENT AND FUEL PRICE INDEX

Contractor shall provide the asphalt and fueld index price for the month before the opening of the bid as determined and published by the New Jersey Department of Transportation.
(http://www.state.nj.us/transportation/business/trnsport/PriceIndex.shtm)

_____ _____
Current Month Year

Fuel Index: _____

Asphalt Cement Index: _____

Asphalt Supplier Location: North / South (circle one) of Route 195

_____
Name and Address of Asphalt Supplier

This Bid is accompanied by bid security either in the form of a certified check or cashiers check drawn on_____

(Name of Bank)

_____

(Address of Bank)

_____

Bank of _____ in the amount of

_____

Dollars or a Bid Bond in the amount of _____ Dollars

guaranteed by the undersigned as Bidder and _____ as Surety. This Bid is also accompanied by a Consent of Surety(s) for Performance Labor and Material Payment Bond, Maintenance Bond and Environmental Maintenance Bond in accordance with the conditions named in the foregoing Information for Bidders.

The undersigned Bidder hereby agrees that if this Bid shall be accepted by the Owner and the undersigned shall fail to execute and deliver the Contract and Contract Bonds in accordance with the terms of this bID and with the requirements of the foregoing Information for Bidders, then the undersigned shall be deemed to have abandoned the Contract, and thereupon the Bid and its acceptance shall be null and void and (1) if a certified check is herewith submitted as bid security, the amount of said check accompanying this Bid shall be due and payable thereunder to the Owner as liquidated damages; otherwise the said certified check, or the amount thereof, shall be returned to the undersigned, or (2) if a Bid Bond is herewith submitted as bid security, the amount specified in the Bid Bond shall be due and payable thereunder to the Owner as liquidated damages in accordance with said Bid Bond; otherwise the Bid Bond shall become null and void.

The undersigned Bidder acknowledges and agrees that such Bidder has received, read, understand, and shall comply with all provisions of the Contract Documents, including Affirmative Action and SED participation requirements thereof..

ACKNOWLEDGMENT OF RECEIPT OF CHANGES TO BID DOCUMENT FORM

_____

(Name of Local Contracting Unit)

_____ _____

(Name of Construction/Public Works Project) (Project or Bid Number)

Pursuant to N.J.S.A. 40A:11-23.1a, the undersigned bidder hereby acknowledges receipt of the following notices, revisions, or addenda to the bid advertisement, specifications or bid documents. By indicating date of receipt, bidder acknowledges the submitted bid takes into account the provisions of the notice, revision or addendum. Note that the local unit's record of notice to bidders shall take precedence and that failure to include provisions of changes in a bid proposal may be subject for rejection of the bid.

Local Unit Reference Number Or Title of Addendum/Revision	How Received (mail, fax, Pick-up, etc.)	Date Received

☐ NO ADDENDA WAS RECEIVED

Acknowledgement by Bidder:

Name of Bidder: _____

By Authorized Representative: _____

Signature: _____

Printed Name and Title: _____

Date: _____

SIGNATURE OF BID BY BIDDER

IN WITNESS WHEREOF the Bidder has signed this Bid or caused this Bid to be signed by the Bidder's duly authorized representative(s).

Signature of Bid by Individual Proprietor:

Witnessed:

_____ _____

_____ _____ (L.S.)

Witnessed Signature Bidder's Signature

(ADD TYPED OR PRINTED NAMES OF BIDDER AND WITNESS)

Date:_____

Signature of Bid in behalf of Partnership (all general partners must sign):

Name of Partnership

_____

_____ By _____

Witness Signature General Partner Signature

_____ By_____

Witness Signature General Partner Signature

_____ By_____

Witness Signature General Partner Signature

_____ By _____

Witness Signature General Partner Signature

(ADD TYPED OR PRINTED NAMES OF PARTNERS AND WITNESSES)
(ADD ADDITIONAL PAGES IF NECESSARY)

Date: _____

Signature of Bid in behalf of Corporation (President and Secretary must sign or corporation resolution authorizing others to sign must be affixed). Affix corporate resolution authorizing the Bid and affix corporate seal to all resolutions and to the Bid.

Attest: Name of Corporation:

_____

_____ By_____

Corporate Seal

(ADD TYPED OR PRINTED NAMES OF OFFICER AND ATTESTING WITNESS)

Date:_____

Signature of Bid in behalf of Limited Liability Company (Manager must sign or Power of Attorney authorizing others to sign must be affixed). Affix Power of Attorney authorizing the Bid and affix company seal to all Power of Attorney and to the Bid.

Attest:

Name of Limited Liability Company

_____

_____ By _____
Manager

By _____
Manager

Company Seal

(ADD TYPED OR PRINTED NAMES OF MANAGER AND WITNESS)

(ADD ADDITIONAL PAGES IF NECESSARY)

Date: _____

STATEMENT OF OWNERSHIP DISCLOSURE
N.J.S.A. 52:25-24.2 (P.L. 1977, c.33, as amended by P.L. 2016, c.43)

This statement shall be completed, certified to, and included with all bid and proposal submissions. Failure to submit the required information is cause for automatic rejection of the bid or proposal.

Name of Organization:

_____

Organization Address:

_____

Part I Check the box that represents the type of business organization:

☐ *Sole Proprietorship (skip Parts II and III, execute certification in Part IV)*

☐ *Non-Profit Corporation (skip Parts II and III, execute certification in Part IV)*

☐ *For-Profit Corporation (any type)* ☐ *Limited Liability Company (LLC)*

☐ *Partnership* ☐ *Limited Partnership* ☐ *Limited Liability Partnership (LLP)*

☐ *Other (be specific):* _____

Part II

☐ *The list below contains the names and addresses of all stockholders in the corporation who own 10 percent or more of its stock, of any class, or of all individual partners in the partnership who own a 10 percent or greater interest therein, or of all members in the limited liability company who own a 10 percent or greater interest therein, as the case may be. (COMPLETE THE LIST BELOW IN THIS SECTION)*

OR

☐ *No one stockholder in the corporation owns 10 percent or more of its stock, of any class, or no individual partner in the partnership owns a 10 percent or greater interest therein, or no member in the limited liability company owns a 10 percent or greater interest therein, as the case may be. (SKIP TO PART IV)*

(Please attach additional sheets if more space is needed):

Name of Individual or Business Entity	*Home Address (for Individuals) or Business Address*

Part III DISCLOSURE OF 10% OR GREATER OWNERSHIP IN THE STOCKHOLDERS, PARTNERS OR LLC MEMBERS LISTED IN PART II

If a bidder has a direct or indirect parent entity which is publicly traded, and any person holds a 10 percent or greater beneficial interest in the publicly traded parent entity as of the last annual federal Security and Exchange Commission (SEC) or foreign equivalent filing, ownership disclosure can be met by providing links to the website(s) containing the last annual filing(s) with the federal Securities and Exchange Commission (or foreign equivalent) that contain the name and address of each person holding a 10% or greater beneficial interest in the publicly traded parent entity, along with the relevant page numbers of the filing(s) that contain the information on each such person. Attach additional sheets if more space is needed.

Website (URL) containing the last annual SEC (or foreign equivalent) filing	*Page #'s*

Please list the names and addresses of each stockholder, partner or member owning a 10 percent or greater interest in any corresponding corporation, partnership and/or limited liability company (LLC) listed in Part II other than for any publicly traded parent entities referenced above. The disclosure shall be continued until names and addresses of every noncorporate stockholder, and individual partner, and member exceeding the 10 percent ownership criteria established pursuant to N.J.S.A. 52:25-24.2 has been listed. Attach additional sheets if more space is needed.

Stockholder/Partner/Member and Corresponding Entity Listed in Part II	*Home Address (for Individuals) or Business Address*

Part IV Certification

I, being duly sworn upon my oath, hereby represent that the foregoing information and any attachments thereto to the best of my knowledge are true and complete. I acknowledge: that I am authorized to execute this certification on behalf of the

bidder/proposer; that the East Windsor Municipal Utilities Authority is relying on the information contained herein and that I am under a continuing obligation from the date of this certification through the completion of any contracts with East Windsor Municipal Utilities Authority to notify the East Windsor Municipal Utilities Authority in writing of any changes to the information contained herein; that I am aware that it is a criminal offense to make a false statement or misrepresentation in this certification, and if I do so, I am subject to criminal prosecution under the law and that it will constitute a material breach of my agreement(s) with the, permitting the East Windsor Municipal Utilities Authority to declare any contract(s) resulting from this certification void and unenforceable.

Full Name (Print):		*Title:*	
Signature:		*Date:*	

CONTRACTOR'S CERTIFICATION

Bidder's Name:_____

Address:_____

The Bidder hereby certifies that it shall comply with and shall require its subcontractors to comply with the discrimination and affirmative action provisions of N.J.S.A. 10:2-1 through 10:2-4, the New Jersey Law Against Discrimination (N.J.S.A. 10:5-1 et seq. and N.J. S.A. 10:5-31 et seq.) and the rules and regulations promulgated pursuant thereto, including but not limited to N.J.A.C. 17:27-1 et seq.

The bidder must comply with all the provisions of N.J.A.C. 7:22-9.1 et. seq. for the participation of small business enterprises owned and controlled by socially and economically disadvantaged individuals. In accordance with the provisions of N.J.S.A. 58:11-26, N.J.A.C. 7:22-3.17(a)24 and 4.17(a)24, the Contractor (and Subcontractors) shall comply with all the provisions of N.J.A.C. 7:22-9.

See Exhibits A and B, attached hereto.

After notification of award, but **before** signing a construction contract the Bidder/Contractor is required to submit to the public agency compliance officer and the affirmative action office an initial project manning table consisting of forms provided by the affirmative action office and completed by the contractor in accordance with N.J.A.C. 17:27-7.

An affirmative action plan for construction contractors and subcontractors shall consist of the following elements:

1. Provisions in the construction contract containing language required by N.J.A.C. 17:27-3.4 (a) and N.J.A.C. 17:27-7.4, or

2. Any existing Federally approved or sanctioned affirmative action program.

(NAME AND TITLE OF SIGNER - PLEASE PRINT OR TYPE)

_____ _____

(DATE)

_____

(SIGNATURE)

(REVISED 4/10)

EXHIBIT A

MANDATORY EQUAL EMPLOYMENT OPPORTUNITY LANGUAGE
N.J.S.A. 10:5-31 et seq. (P.L. 1975, C. 127)
N.J.A.C. 17:27

GOODS, PROFESSIONAL SERVICE AND GENERAL SERVICE CONTRACTS

During the performance of this contract, the contractor agrees as follows:

The contractor or subcontractor, where applicable, will not discriminate against any employee or applicant for employment because of age, race, creed, color, national origin, ancestry, marital status, affectional or sexual orientation, gender identity or expression, disability, nationality or sex. Except with respect to affectional or sexual orientation and gender identity or expression, the contractor will ensure that equal employment opportunity is afforded to such applicants in recruitment and employment, and that employees are treated during employment, without regard to their age, race, creed, color, national origin, ancestry, marital status, affectional or sexual orientation, gender identity or expression, disability, nationality or sex. Such equal employment opportunity shall include, but not be limited to the following: employment, upgrading, demotion, or transfer; recruitment or recruitment advertising; layoff or termination; rates of pay or other forms of compensation; and selection for training, including apprenticeship. The contractor agrees to post in conspicuous places, available to employees and applicants for employment, notices to be provided by the Public Agency Compliance Officer setting forth provisions of this nondiscrimination clause.

The contractor or subcontractor, where applicable will, in all solicitations or advertisements for employees placed by or on behalf of the contractor, state that all qualified applicants will receive consideration for employment without regard to age, race, creed, color, national origin, ancestry, marital status, affectional or sexual orientation, gender identity or expression, disability, nationality or sex.

The contractor or subcontractor will send to each labor union, with which it has a collective bargaining agreement, a notice, to be provided by the agency contracting officer, advising the labor union of the contractor's commitments under this chapter and shall post copies of the notice in conspicuous places available to employees and applicants for employment.

The contractor or subcontractor, where applicable, agrees to comply with any regulations promulgated by the Treasurer pursuant to N.J.S.A. 10:5-31 et seq., as amended and supplemented from time to time and the Americans with Disabilities Act.

The contractor or subcontractor agrees to make good faith efforts to meet targeted county employment goals established in accordance with N.J.A.C. 17:27-5.2.

The contractor or subcontractor agrees to inform in writing its appropriate recruitment agencies including, but not limited to, employment agencies, placement bureaus, colleges, universities, and labor unions, that it does not discriminate on the basis of age, race, creed, color, national origin, ancestry, marital status, affectional or sexual orientation, gender identity or expression, disability, nationality or sex, and that it will discontinue the use of any recruitment agency which engages in direct or indirect discriminatory practices.

The contractor or subcontractor agrees to revise any of its testing procedures, if necessary, to assure that all personnel testing conforms with the principles of job-related testing, as established by the statutes and court decisions of the State of New Jersey and as established by applicable Federal law and applicable Federal court decisions.

In conforming with the targeted employment goals, the contractor or subcontractor agrees to review all procedures relating to transfer, upgrading, downgrading and layoff to ensure that all such actions are taken without regard to age, race, creed, color, national origin, ancestry, marital status, affectional or sexual orientation, gender identity or expression, disability, nationality or sex, consistent with the statutes and court decisions of the State of New Jersey, and applicable Federal law and applicable Federal court decisions.

The contractor shall submit to the public agency, after notification of award but prior to execution of a goods and services contract, one of the following three documents:

Letter of Federal Affirmative Action Plan Approval

Certificate of Employee Information Report

Employee Information Report Form AA302 (electronically provided by the Division and distributed to the public agency through the Division's website at www.state.nj.us/treasury/contract_compliance)

The contractor and its subcontractors shall furnish such reports or other documents to the Division of Public Contracts Equal Employment Opportunity Compliance as may be requested by the office from time to time in order to carry out the purposes of these regulations, and public agencies shall furnish such information as may be requested by the Division of Public Contracts Equal Employment Opportunity Compliance for conducting a compliance investigation pursuant to ***Subchapter 10 of the Administrative Code at N.J.A.C. 17:27****.*

(REVISED 4/10)

EXHIBIT B

MANDATORY EQUAL EMPLOYMENT OPPORTUNITY LANGUAGE
N.J.S.A. 10:5-31 et seq. (P.L. 1975, C. 127)
N.J.A.C. 17:27

CONSTRUCTION CONTRACTS

During the performance of this contract, the contractor agrees as follows:

The contractor or subcontractor, where applicable, will not discriminate against any employee or applicant for employment because of age, race, creed, color, national origin, ancestry, marital status, affectional or sexual orientation, gender identity or expression, disability, nationality or sex. Except with respect to affectional or sexual orientation and gender identity or expression, the contractor will ensure that equal employment opportunity is afforded to such applicants in recruitment and employment, and that employees are treated during employment, without regard to their age, race, creed, color, national origin, ancestry, marital status, affectional or sexual orientation, gender identity or expression, disability, nationality or sex. Such equal employment opportunity shall include, but not be limited to the following: employment, up-grading, demotion, or transfer; recruitment or recruitment advertising; layoff or termination; rates of pay or other forms of compensation; and selection for training, including apprenticeship. The contractor agrees to post in conspicuous places, available to employees and applicants for employment, notices to be provided by the Public Agency Compliance Officer setting forth provisions of this nondiscrimination clause.

The contractor or subcontractor, where applicable will, in all solicitations or advertisements for employees placed by or on behalf of the contractor, state that all qualified applicants will receive consideration for employment without regard to age, race, creed, color, national origin, ancestry, marital status, affectional or sexual orientation, gender identity or expression, disability, nationality or sex.

The contractor or subcontractor will send to each labor union, with which it has a collective bargaining agreement, a notice, to be provided by the agency contracting officer, advising the labor union or workers' representative of the contractor's commitments under this act and shall post copies of the notice in conspicuous places available to employees and applicants for employment.

The contractor or subcontractor, where applicable, agrees to comply with any regulations promulgated by the Treasurer, pursuant to N.J.S.A. 10:5-31 et seq., as amended and supplemented from time to time and the Americans with Disabilities Act.

When hiring or scheduling workers in each construction trade, the contractor or subcontractor agrees to make good faith efforts to employ minority and women workers in each construction trade consistent with the targeted employment goal prescribed by N.J.A.C. 17:27-7.2; provided, however, that the Division may, in its discretion, exempt a contractor or subcontractor from compliance with the good faith procedures prescribed by the following provisions, A, B and C, as long as the Division is satisfied that the contractor or subcontractor is employing workers provided by a union which provides evidence, in accordance with standards prescribed by the Division, that its percentage of active "card carrying" members who are minority and women workers is equal to or greater than the targeted employment goal established in accordance with N.J.A.C. 17:27-7.2. The contractor or subcontractor agrees that a good faith effort shall include compliance with the following procedures:

(A) If the contractor or subcontractor has a referral agreement or arrangement with a union for a construction trade, the contractor or subcontractor shall, within three business days of the contract award, seek assurances from the union that it will cooperate with the contractor or subcontractor as it fulfills its affirmative action obligations under this contract and in accordance with the rules promulgated by the Treasurer pursuant to N.J.S.A. 10:5-31 et. seq., as supplemented and amended from time to time and the Americans with Disabilities Act. If the contractor or subcontractor is unable to obtain said assurances from the construction trade union at least five business days prior to the commencement of construction work, the contractor or subcontractor agrees to afford equal employment opportunities minority and women workers directly, consistent with this chapter. If the contractor's or subcontractor's prior experience with a construction trade union, regardless of whether the union has provided said assurances, indicates a significant possibility that the trade union will not refer sufficient minority and women workers consistent with affording equal employment opportunities as specified in this chapter, the contractor or subcontractor agrees to be prepared to provide such opportunities to minority and women workers directly, consistent with this chapter, by complying with the hiring or scheduling procedures prescribed under (B) below; and the contractor or subcontractor further agrees to take said action immediately if it determines that the union is not referring minority and women workers consistent with the equal employment opportunity goals set forth in this chapter.

(B) If good faith efforts to meet targeted employment goals have not or cannot be met for each construction trade by adhering to the procedures of (A) above, or if the contractor does not have a referral agreement or arrangement with a union for a construction trade, the contractor or subcontractor agrees to take the following actions:

(l) To notify the public agency compliance officer, the Division, and minority and women referral organizations listed by the Division pursuant to N.J.A.C. 17:27-5.3, of its workforce needs, and request referral of minority and women workers;

(2) To notify any minority and women workers who have been listed with it as awaiting available vacancies;

(3) Prior to commencement of work, to request that the local construction trade union refer minority and women workers to fill job openings, provided the contractor or subcontractor has a referral agreement or arrangement with a union for the construction trade;

(4) To leave standing requests for additional referral to minority and women workers with the local construction trade union, provided the contractor or subcontractor has a referral agreement or arrangement with a union for the construction trade, the State Training and Employment Service and other approved referral sources in the area;

(5) If it is necessary to lay off some of the workers in a given trade on the construction site, layoffs shall be conducted in compliance with the equal employment opportunity and non-discrimination standards set forth in this regulation, as well as with applicable Federal and State court decisions;

(6) To adhere to the following procedure when minority and women workers apply or are referred to the contractor or subcontractor:

(i) The contactor or subcontractor shall interview the referred minority or women worker.

(ii) If said individuals have never previously received any document or certification signifying a level of qualification lower than that required in order to perform the work of the construction trade, the contractor or subcontractor shall in good faith determine the qualifications of such individuals. The contractor or subcontractor shall hire or schedule those individuals who satisfy appropriate qualification standards in conformity with the equal employment opportunity and non-discrimination principles set forth in this chapter. However, a contractor or subcontractor shall determine that the individual at least possesses the requisite skills, and experience recognized by a union, apprentice program or a referral agency, provided the referral agency is acceptable to the Division. If necessary, the contractor or subcontractor shall hire or schedule minority and women workers who qualify as trainees pursuant to these rules. All of the requirements, however, are limited by the provisions of (C) below.

(iii) The name of any interested women or minority individual shall be maintained on a waiting list, and shall be considered for employment as described in (i) above, whenever vacancies occur. At the request of the Division, the contractor or subcontractor shall provide evidence of its good faith efforts to employ women and minorities from the list to fill vacancies.

(iv) If, for any reason, said contractor or subcontractor determines that a minority individual or a woman is not qualified or if the individual qualifies as an advanced trainee or apprentice, the contractor or subcontractor shall inform the individual in writing of the reasons for the determination, maintain a copy of the determination in its files, and send a copy to the public agency compliance officer and to the Division.

(7) To keep a complete and accurate record of all requests made for the referral of workers in any trade covered by the contract, on forms made available by the Division and submitted promptly to the Division upon request.

(C) The contractor or subcontractor agrees that nothing contained in (B) above shall preclude the contractor or subcontractor from complying with the union hiring hall or apprenticeship policies in any applicable collective bargaining agreement or union hiring hall arrangement, and, where required by custom or agreement, it shall send journeymen and trainees to the union for referral, or to the apprenticeship program for admission, pursuant to such agreement or arrangement. However, where the practices of a union or apprenticeship program will result in the exclusion of minorities and women or the failure to refer minorities and women consistent with the targeted county employment goal, the contractor or subcontractor shall consider for employment persons referred pursuant to (B) above without regard to such agreement or arrangement; provided further, however, that the contractor or subcontractor shall not be required to employ women and minority advanced trainees and trainees in numbers which result in the employment of advanced trainees and trainees as a percentage of the total workforce for the construction trade, which percentage significantly exceeds the apprentice to journey worker ratio specified in the applicable collective bargaining agreement, or in the absence of a collective bargaining agreement, exceeds the ratio established by practice in the area for said construction trade. Also, the contractor or subcontractor agrees that, in implementing the procedures of (B) above, it shall, where applicable, employ minority and women workers residing within the geographical jurisdiction of the union.

After notification of award, but prior to signing a construction contract, the contractor shall submit to the public agency compliance officer and the Division an initial project workforce report (Form AA 201) electronically provided to the public agency by the Division, through its website, for distribution to and completion by the contractor, in accordance with N.J.A.C. 17:27-7. The contractor also agrees to submit a copy of the Monthly Project Workforce Report once a month thereafter for the duration of this contract to the Division and to the public agency compliance officer.

The contractor agrees to cooperate with the public agency in the payment of budgeted funds, as is necessary, for on-the-job and/or off-the-job programs for outreach and training of minorities and women.

(D) The contractor and its subcontractors shall furnish such reports or other documents to the Division of Public Contracts Equal Employment Opportunity Compliance as may be requested by the Division from time to time in order to carry out the purposes of these regulations, and public agencies shall furnish such information as may be requested by the Division of Public Contracts Equal Employment Opportunity Compliance for conducting a compliance investigation pursuant to ***Subchapter 10 of the Administrative Code (NJAC 17:27).***

CERTIFICATION OF EQUAL EMPLOYMENT OPPORTUNITY

By The submission of this bid and in accordance with Executive Order No. 11246, Section 202, dated September 24, 1965, the bidder, offeror, applicant, or subcontractor certifies that he shall not discriminate against any employee or applicant for employment because of race, color, creed, or national origin. This obligation not to discriminate in employment includes, but is not limited to, the following:

HIRING, PLACEMENT UPGRADING, TRANSFER OR DEMOTION, RECRUITMENT, ADVERTISING, OR SOLICITION, FOR EMPLOYMENT, TRAINING DURING EMPLOYMENT, RATES OF PAY OR OTHER FORMS OF COMPENSATION, SELECTION FOR TRAINING INCLUDING APPREHENSHIP, LAYOFF, OR TERMINATION.

He further agrees that (except where he has obtained identical certifications from proposed subcontractors for specific time periods) he will obtain identical certifications from proposed subcontractors prior to the award of subcontractors exceeding $10,000, which are not exempt from the provision of Equal Opportunity clause: that he will retain such certifications in his files, and that he will post in a conspicuous place and forward Notice of Non-Discrimination to such proposed subcontractors (except where the proposed subcontractors have submitted identical certification for specific time periods).

_____ _____

Signature Date

_____

Name and Title of Signer (Please Type)

AFFIRMATIVE ACTION CERTIFICATION

A. This contract is subject to and all bidders are required to comply with the requirements of N.J.S.A. 10:5-31 et seq. and N.J.A.C. 17:27; Affirmative Action Regulations.

B. For any violations of this law in addition to all other penalties allowable by law, the violator shall be subject to a fine up to $1,000.00 for each violation for each day during which the violation continues, as delineated in N.J.A.C. 17:27-10.6, with said fine to be collected in a summary manner pursuant to the "Penalty Enforcement Law of 1999" (N.J.S.A. 2A:58-10 et seq.) (P.L. 1975, C127, Para. 5b) (N.J.A.C. 17:27).

C. ALL CONTRACTORS

1. All contractors shall complete and submit the Initial Project Workforce Report Form AA-201, upon notification of award. Proper completion and submission of this report shall constitute evidence of the contractor's compliance with the regulations.

2. Failure to submit the form may result in the contract being terminated.

3. The contractor also agrees to submit a copy of the Monthly Project Workforce Report Form AA-202, once a month thereafter for the duration of the contract to the Division of Contract Compliance and to the Public Agency Compliance Officer.

The undersigned contractor certifies that he is aware of the commitment to comply with the requirements of N.J.S.A. 10:5-31 et seq. and N.J.A.C. 17:27 and agrees to furnish the required documentation pursuant to the Law.

COMPANY: _____

SIGNATURE: _____

TITLE: _____

NOTE: A contractor's bid must be rejected as non-responsive if a contractor fails to comply with the requirements of N.J.S.A. 10:5-31 et seq. and N.J.A.C. 17:27.

PROMPT PAYMENT CERTIFICATION

I make this certification on behalf of myself as a representative of the contractor named below ("Contractor") and on behalf of the Contractor. I certify that for each application for payment submitted in connection with this project: (1) the work covered by that application for payment has been completed in accordance with the contract documents; (2) the payment requested is due; and (3) all amounts have been paid by the Contractor for work for which previous payments were issued. No application for payment will be submitted without Contractor having paid all subcontractors and suppliers their share of any funds received by Contractor pursuant to any previous application(s) for payment. I understand and acknowledge that this entire certification will be considered incorporated into every request for payment. I understand and acknowledge that if Contractor submits an application for payment without (1) having completed work in accordance with the contract documents, (2) payment requested being due, and/or (3) having paid all subcontractors and suppliers their share of any funds received by Contractor pursuant to any previous application(s) for payment, then Contractor has submitted a false claim and false certification, subjecting Contractor to liability, damages and penalties under the New Jersey False Claims Act, N.J.S.A. 2A:32C-1 et seq.

If there is some legitimate reason Contractor cannot timely pay a subcontractor or supplier, then Contractor must submit a signed certification or affidavit to the owner/government entity fully explaining the situation, when the situation arose, and when it will be resolved. A failure to submit such an explanatory certification waives any defenses Contractor may later seek to assert in connection with liability under the New Jersey False Claims Act, N.J.S.A. 2A:32C-1 et seq. or any other law, including N.J.A.C. 7:1D et seq.

I further understand and acknowledge that a false certification, whether express or implied, that (1) the work covered by an application for payment has been completed in accordance with the contract documents, (2) the payment requested is due, and/or (3) all amounts have been paid by the Contractor to subcontractors or suppliers for work for which previous payments were issued, is misleading with respect to the goods and services Contractor is providing.

I also understand and acknowledge that the requirements that (1) work has been completed in accordance with the contract documents, (2) the payment requested is due, and (3) all amounts have been paid by the Contractor for work for which previous payments were issued, are material to the State's decision to allocate State funding dollars for this contract, and also material to any local government entity's decision to retain and make payment to the contractor. I understand and acknowledge that if owner/government entity makes payment knowing of such violations, that does not demonstrate that the requirements are not material, and does not constitute a waiver of liability under the New Jersey False Claims Act, N.J.S.A. 2A:32C-1 et seq. To the contrary, Contractor recognizes that owner/government entity may decide to continue to pay Contractor due to contractual and/or logistical requirements or considerations.

Additionally, I understand and acknowledge that a false certification, whether express or implied, that (1) the work covered by an application for payment has been

completed in accordance with the contract documents, (2) the payment requested is due, and/or (3) all amounts have been paid by the Contractor for work for which previous payments were issued, constitutes legitimate grounds for debarment pursuant to N.J.A.C. 7:1D et seq.

_____ _____

Signature Date

_____

Name and Title of Signer (Please Type)

CERTIFICATION OF NONSEGREGATED FACILITIES

(Applicable to state-assisted construction contracts and related subcontracts exceeding $10,000 which are not exempt from the Equal Opportunity clause.)

The construction contractor certifies that he does not maintain or provide for his employees any segregated facilities at any of his establishments, and that he does not permit his employees to perform their services at any location, under his control, where segregated facilities are maintained. The state-assisted construction contractor certifies further that he will not maintain or provide for his employees any segregated facilities at any of his establishments, and that he will not permit his employees to perform their services at any location, under his control, where segregated facilities are maintained. The state-assisted construction contractor agrees that a breach of this certification is a violation of the Equal Opportunity clause in this contract. As used in this certification, the term "segregated facilities" means any waiting rooms, work areas, rest rooms and wash rooms, restaurants and other eating areas, time clocks, locker rooms and other storage or dressing areas, parking lots, drinking fountains, recreation or entertainment areas, transportation, and housing facilities provided for employees which are segregated by explicit directive or are in fact segregated on the basis of race, creed, color, or national origin, because of habit, local custom, or otherwise. The state-assisted construction contractor agrees that (except where he has obtained identical certifications from proposed subcontractors for specific time periods) he will obtain identical certifications from proposed subcontractors prior to the award of subcontracts exceeding $10,000 which are not exempt from the provisions of the Equal Opportunity clause, and that he will retain such certifications in his files.

_____ _____

Signature Date

_____ _____

Name and Title of Signer (Please Type)

NOTE: The penalty for making false statements in offers is prescribed in 18 USC 1001.

LISTING OF SUBCONTRACTORS TO BE USED

Before submitting his bid, the Bidder shall completely familiarize himself with Section 40A:11-16 of the New Jersey Local Public Contracts Law (New Jersey Statutes Annotated 40A:11-16). On contracts for the erection, alteration or repair of any public building, if the Bidder will use subcontractors for the plumbing work and gas fitting and all kindred work, steam and hot water heating and ventilating apparatus, steam power plants and kindred work, electrical work, structural steel and ornamental iron work he shall list below the name and address of each subcontractor to be used for these respective and kindred categories of work.

WORK CATEGORY	NAME	ADDRESS
Plumbing and Gas Fitting and all kindred work		
Steam Power Plants, Steam and Hot Water Heating and Ventilating Apparatus, and all Kindred Work		
Electrical Work		
Structural Steel and Ornamental Iron Work		

(Attach Additional Pages as Required)

NOTE: Submission of the names and addresses of the subcontractors required by N.J.S.A. 40A:11-16 is essential and nonwaiveable. The names and addresses for subcontractors must be provided for each work category above, otherwise the bid will be deemed nonresponsive. Where **more than one** subcontractor is named for a work category, the bidder must identify, in the Bid, the scope of work that is to be performed by each subcontractor, as required by P.L. 1997, c. 408. Failure to comply with these statutory requirements will result in the Bid being deemed nonresponsive.

NON-COLLUSION AFFIDAVIT

STATE OF NEW JERSEY, COUNTY OF_____ ss.:

I,_____, of the City of _____ in the County of _____and the State of _____of full age, being duly sworn according to law on my oath depose and say that:

I am _____of the firm of_____the bidder making the Bid for the above-named contract, and that I executed the said Bid with full authority so to do; that said bidder has not, directly or indirectly, entered into any agreement, participated in any collusion, or otherwise taken any action in restraint of free, competitive bidding in connection with the within Contract; and that all statements contained in said Bid and in this Affidavit are true and correct, and made with full knowledge that the East Windsor Municipal Utilities Authority relies upon the truth of the statements contained in said Proposal and in the statements contained in this Affidavit in awarding the Contract.

I further warrant that no person or selling agency has been employed or retained to solicit or secure such Contract upon an agreement or understanding for a commission, percentage, brokerage or contingent fee, except bona fide employees or bona fide established commercial or selling agencies maintained by the bidder for the purpose of securing business.

For breach or violation of this warranty the Owner shall have the right to annul the Contract without liability or in its discretion to deduct from the Contract price or consideration the full amount of such commission, percentage, brokerage or contingent fee.

(N.J.S.A. 52:34-15)

(Name of Bidder)

_____

_____

Signature

Typed name:_____

Subscribed and sworn to
before me this _____day
of _____, 20__.

_____

Notary Public of

EAST WINDSOR MUNICIPAL UTILITIES AUTHORITY

HUNTINGTON DRIVE WATER MAIN REPLACEMENT
CONTRACT NO. 2018-01

CERTIFICATION OF BIDDER'S STATUS ON THE STATE TREASURER'S LIST OF DEBARRED, SUSPENDED AND DISQUALIFIED BIDDERS

The Contractor shall submit with his bid a sworn statement, as set forth herein signed by an officer or partner of the Contractor, indicating whether or not the Contractor is at the time of the bid, included on the State Treasurer's List of Debarred, Suspended, or Disqualified Bidders. The Contractor will immediately notify the Owner whenever it appears that a Contractor is on the State Treasurer's List. The Contractor may be debarred, suspended, or disqualified from contracting with the State of New Jersey and NJDEP if the Contractor commits any of the acts listed in N.J.A.C. 7:1D-2.2.

STATE OF NEW JERSEY §:

COUNTY OF

I,_____of the City of _____

in the County of_____and the State of_____of full age,

being duly sworn according to law on my oath depose and say that:

I am_____, an officer of the firm of _____the bidder making the Proposal for the above named work, and that I executed the said Proposal with full authority to do so that said bidder at the time of making of this bid, is not included on the State of New Jersey, State Treasurer's List of Debarred, Suspended and Disqualified Bidder; and that all statements contained in said Proposal and in the affidavit are true and correct, and made with the full knowledge that the Owner as Local Unit relies upon the truth of the statements contained in said Proposal and in the statements contained in this affidavit in awarding the contract for said work.

The undersigned further warrants that should the name of the firm making this bid appear on the State Treasurer's List of Debarred, Suspended and Disqualified Bidders at anytime prior to, and during the life of this Contract, including the Guarantee Period, that The_____(Loan Applicant) shall be immediately notified by the signatory of this Eligibility Affidavit.

The undersigned understands that the firm making the bid as a Contractor is subject to debarment, suspension and/or disqualification in contracting with the State of New Jersey and the Department of Environmental Protection if the Contractor, pursuant to N.J.A.C. 7:1D-2.2 commits any of the acts listed therein, and as determined according to applicable law and regulation.

_____

(Insert Name and Address of Contractor)

_____

(Insert Name and Title of Affiant)

Subscribed and sworn

before me this_____day

of_____20_____

_____

Notary Public of_____

My commission expires_____, 20___

497

REQUIREMENT FOR CERTIFICATE OF SURETY

The Contractor bidding this single overall contract shall furnish to the East Windsor Municipal Utilities Authority Certificates of Surety for a Performance Labor and Material Payment Bond for an amount equal to 100% of the Bid price and for a Maintenance Bond in an amount equal to 100% of the Contract Price (less the amount of the Environmental Maintenance Bond), and for an Environmental Maintenance Bond in the amount of $25,000, or 50% of the price bid for the materials needed to fulfill the environmental specifications, whichever is greater. Certificates of Surety may be supplied by the Bidder on behalf of himself and any or all subcontractors, or by each respective subcontractor, or by any combination thereof which results in evidence of performance security equaling the required amounts. Certificates of Surety and Bonds shall be on the forms included in the Contract Documents or on equivalent forms as may be approved by the Owner's Attorney.

CERTIFICATE OF SURETY

WHEREAS the Contractor named below has requested that the undersigned Surety Company provide the bonds required by Contract No. 2017-01 of the East Windsor Municipal Utilities Authority Mercer County, New Jersey, Water Main Replacement – Huntington Drive; and

WHEREAS the undersigned Surety Company, authorized to do business in New Jersey, desires to provide a statement as required by the New Jersey Local Public Contracts Law, N.J.S.A. 40a:11-22, that it will provide the said bonds in the forms and amounts required;

NOW, THEREFORE, in consideration of the premises and One Dollar ($1.00), lawful money of the United States to it in hand paid by the said Contractor, the receipt whereof is hereby acknowledged, the undersigned Surety Company hereby certifies and agrees that if Contract No. 2018-01 of the East Windsor Municipal Utilities Authority Mercer County, New Jersey, Huntington Drive Water Main Replacement.

It will become bound as surety and guarantor, in a penal sum equal to 100% of the Contractor's accepted bid for Contract No. 2018-01, less the amount of the Environmental Maintenance Bond, for the faithful performance of said Contract according to its terms and conditions and for the payment of all lawful claims of subcontractors, materialmen, laborers, persons, firms or corporations for labor performed or materials, provisions, provender or other supplies or teams, fuels, oils, implements or machinery furnished, used or consumed in the carrying forward, performing or completing of said Contract, such guarantee to remain in effect through the end of the period within which such claims must be asserted under the New Jersey Municipal Mechanics' Lien Law; and

It will become bound as surety and guarantor, in a penal sum equal to 100% of the Contract Price for Contract No. 2018-01, for the faithful performance of the work required under the Article of the Contract entitled "Maintenance Period". Said bond to remain in effect through the end of the Maintenance Period; and

It will become bound as surety and guarantor for the faithful performance of the environmental protection requirements of the Contract, in an amount of $25,000.00 or 50% of the price bid for the materials needed to fulfill the environmental protection requirements of the Contract, whichever is greater.

The undersigned surety agrees to execute the said bonds as surety and will deliver them to the Owner under said Contract as obligee, upon the demand of said Owner.

Name and Address of Principal (Contractor):

_____

_____

_____

IN WITNESS WHEREOF said Surety Company has caused these presents to be signed and attested by its duly authorized representatives and its corporate seal to be hereto affixed this _____ day of _____, 20___ .

Attest: Surety Company

By_____

Address_____

_____

_____

Phone_____

Note: A corporate acknowledgment of the Surety Company and evidence of the authority of the signer is to be attached hereto by the Surety Company. In addition, surety must be a New Jersey corporation or authorized to do business in New Jersey.

BID BOND

KNOW ALL MEN BY THESE PRESENTS, that we_____,

_____ Hereinafter called the Principal, as Principal, and _____

_____a corporation duly organized under the laws of the State of_

_____and licensed or authorized to do business in New Jersey,

hereinafter called the Surety, as Surety, are held and firmly bound unto_____

_____hereinafter called the Obligee, in the sum of_____

_____Dollars ($_____), for the payment of

which sum well and truly to be made, the said Principal and the said Surety, bind ourselves, our heirs, executors, administrators, successors and assigns, jointly and severally, firmly by these presents.

WHEREAS, The Principal has submitted a bid for _____

_____

_____

_____

_____

NOW, THEREFORE, if the Obligee shall accept the Bid of the Principal and the Principal shall enter into a Contract with the Obligee in accordance with the terms of such bid and the Contract Documents; and give such bond or bonds as may be specified in the Contract Documents with good and sufficient surety for the faithful performance of such Contract, for the prompt payment of labor and material furnished in the prosecution thereof and for the environmental maintenance requirements thereof; and deliver evidence of insurance and such other documents as are required by the Contract Documents as conditions precedent to the Owner's execution of the Contract, all within the times required in the Contract Documents, then this obligation shall be null and void, otherwise to remain in full force and effect.

SIGNED AND SEALED this _____day of _____A.D. 20_____.

In the presence of:

_____
(Seal) PRINCIPAL

_____ _____
WITNESS TITLE

_____(Seal)
SURETY

_____ _____(Seal)
WITNESS TITLE

IMPORTANT - Surety companies executing BONDS must appear on the Treasury Department's most current list (Circular 570, as amended) and be authorized to transact business in the state where the project is located.

EQUIPMENT CERTIFICATION

INSTRUCTIONS FOR COMPLETING THE EQUIPMENT CERTIFICATION

For the necessary equipment owned, leased or controlled by the Bidder, Part 1 shall be completed. For the necessary equipment not owned, leased or controlled by the Bidder, Part 2 shall be completed. These certifications are made pursuant to the provisions of N.J.S.A. 40A:11-20 and must be submitted with the Bid. Attach additional pages, if necessary.

PART 1

This is to certify that I, the Bidder signing the attached Bid, own, lease or control the necessary equipment required to accomplish the work shown and described in the Contract Documents and described below.

List of Equipment

_____	_____
_____	_____
_____	_____
_____	_____
_____	_____
_____	_____
_____	_____
_____	_____
_____	_____
_____	_____
_____	_____
_____	_____

(Attach Additional Sheets as Required)

_____	_____
Date	Signature of Bidder

PART 2

This is to certify that I, the undersigned, own or control the equipment required and noted below and definitely grant the Bidder named below the control of said equipment during such time as may be required for that portion of the work described in the Contract Documents for Contract No. 2018-01 of the East Windsor Municipal Utilities Authority.

Date	Signature of Owner or Controller of Equipment
Name of Bidder	Business Address of Owner or Controller of Equipment

List of Equipment

(Attach Additional Sheets as Required)

DISCLOSURE OF CONTRIBUTIONS TO

NEW JERSEY ELECTION LAW ENFORCEMENT COMMISSION (ELEC)

Starting in January 2007, all business entities are advised of their responsibility to file an annual disclosure statement of political contributions with the New Jersey Election Law Enforcement Commission (ELEC) pursuant to N.J.S.A. 19:44A-20.27 if they receive contracts in excess of $50,000 from public entities in a calendar year. Business entities are responsible for determining if filing is necessary. Additional information on this requirement is available from ELEC at 888-313-3532 or at www.elec.state.nj.us.

* * * * *

STATE OF NEW JERSEY
Division of Purchase and Property
DISCLOSURE OF INVESTMENT ACTIVITIES IN IRAN

Contract Number: _____ **Bidder:** _____

Pursuant to Public Law 2012, c. 25, any person or entity that submits a bid or proposal or otherwise proposes to enter into or renew a contract must complete the certification below to attest, under penalty of perjury, that neither the person or entity, nor any of its parents, subsidiaries, or affiliates, is identified on the Department of Treasury's Chapter 25 list as a person or entity engaging in investment activities in Iran. The Chapter 25 list is found on the Division's website at http://www.state.nj.us/treasury/purchase/pdf/Chapter25List.pdf. Bidders must review this list prior to completing the below certification. Failure to complete the certification will render a bidder's proposal non-responsive. If the Director finds a person or entity to be in violation of the law, s/he shall take action as may be appropriate and provided by law, rule or contract, including but not limited to, imposing sanctions, seeking compliance, recovering damages, declaring the party in default and seeking debarment or suspension of the party.

PLEASE CHECK THE APPROPRIATE BOX:

I certify, pursuant to Public Law 2012, c. 25, that neither the bidder listed above nor any of the bidder's parents, subsidiaries, or affiliates is listed on the N.J. Department of the Treasury's list of entities determined to be engaged in prohibited activities in Iran pursuant to P.L. 2012, c. 25 ("Chapter 25 List"). I further certify that I am the person listed above, or I am an officer or representative of the entity listed above and am authorized to make this certification on its behalf. **I will skip Part 2 and sign and complete the Certification below.**

OR

I am unable to certify as above because the bidder and/or one of its parents, subsidiaries, or affiliates is listed on the Department's Chapter 25 list. I will provide a detailed, accurate and precise description of the activities in Part 2 below and sign and complete the certification below. Failure to provide such will result in the proposal being rendered as non-responsive and appropriate penalties, fines and/or sanctions will be assessed as provided by law.

PART 2: PLEASE PROVIDE FURTHER INFORMATION RELATED TO INVESTMENT ACTIVITIES IN IRAN

You must provide a detailed, accurate and precise description of the activities of the bidding person/entity, or one of its parents, subsidiaries or affiliates, engaging in the investment activities in Iran outlined above by completing the boxes below.

Name: _____ Relationship to Bidder: _____

Description of Activities: _____

_____

Duration of Engagement: _____ Anticipated Cessation Date: _____

Bidder Contact Name: _____ Contact Phone Number: _____

[ADD AN ADDITIONAL ACTIVITIES ENTRY]

Certification: I, being duly sworn upon my oath, hereby represent and state that the foregoing information and any attachments thereto to the best of my knowledge are true and complete. I attest that I am authorized to execute this certification on behalf of the above-referenced person or entity. I acknowledge that the State of New Jersey is relying on the information contained herein and thereby acknowledge that I am under a continuing obligation from the date of this certification through the completion of any contracts with the State to notify the State in writing of any changes to the answers of information contained herein. I acknowledge that I am aware that it is a criminal offense to make a false statement or misrepresentation in this certification, and if I do so, I recognize that I am subject to criminal prosecution under the law and that it will also constitute a material breach of my agreement(s) with the State of New Jersey and that the State at its option may declare any contract(s) resulting from this certification void and unenforceable.

Full Name (Print): _____ Signature: _____

Title: _____ Date: _____

CERTIFICATION FOR
AMERICAN IRON AND STEEL REQUIREMENTS OF P.L. 113076
CONSOLIDATED APPROPRIATIONS ACT, 2014

The Bidder acknowledges to and for the benefit of the Bayonne Municipal Utilities Authority and the State of New Jersey that it understands the goods and services under this Agreement are being funded with monies made available by the Clean Water State Revolving Fund and/or Drinking Water State Revolving Fund that have statutory requirements commonly known as "American Iron and Steel;" that requires all the iron and steel products used in the project to be produced in the United States ("American Iron and Steel Requirement") including iron and steel products provided by the Bidder pursuant to this Agreement. The Bidder hereby represents and warrant to and for the benefit of the Owner and the State that (a) the Bidder has reviewed and understands the American Iron and Steel Requirement, (b) all of the iron and steel products used in the project will be and/or have been produced in the United States in a manner that complies with the American Iron and Steel Requirement, unless a waiver of the requirement is approved, and (c) the Bidder will provide any further verified information, certification or assurance of compliance with this paragraph, or information necessary to support a waiver of the American Iron and Steel Requirement, as may be requested by the Owner or the State. Notwithstanding any other provision of this Agreement, any failure to comply with this paragraph by the Bidder shall permit the Owner or State to recover as damages against the Bidder any loss, expense, or cost (including without limitation attorney's fees) incurred by the Owner or State resulting from any such failure (including without limitation any impairment or loss of funding, whether in whole or in part, from the State or any damages owed to the State by the Owner). While the Bidder has no direct contractual privity with the State, as a lender to the Owner for the funding of this project, the Owner and the Bidder agree that the State is a third-party beneficiary and neither this paragraph (nor any other provision of this Agreement necessary to give this paragraph force or effect) shall be amended or waived without the prior written consent of the State.

_____ _____

Date Signature of Bidder

DOCUMENT SUBMISSION CHECKLIST
PART I
Items Mandatory for Bid

The bidder shall submit, with the Bid, the following Items Mandatory for Bid. In order to be considered an adequate submission, each item must meet the requirements of the relevant statute and, in the case of the execution of the Contract Documents, must be legally binding on the bidder.

By initialing the entries herein, the bidder indicates that the required items have been included with the Bid as required herein.

Initials	Items
	A guarantee to accompany the bid that complies with N.J.S.A. 40A:11-21.
	A certificate from a surety company that complies with N.J.S.A.40A:11-22.
	A statement of corporate ownership that complies with N.J.S.A. 52:25-24.2
	A listing of subcontractors that complies with N.J.S.A. 40A:11-16.
	A document provided by the Owner for the bidder to acknowledge the bidder's receipt of any notices, revisions or addenda to the advertisement or bid documents pursuant to N.J.S.A. 40A:11-23.1.
	Bid is legally executed on behalf of the bidder.
	Certification of Nonsegregated Facilities
	Prices for each bid item contained in the Bid forms.
	A signed "Disclosure of Investment Activities in Iran" form that complies with N.J.S.A. 40A:11-2.1
	Bidder has executed the Part I Certification, below.

Certification

I hereby certify that I have enclosed with the Bid, each of the items initialed above.

NOTE: This Part I of the Document Submission Checklist shall be initialed and signed as instructed above and shall be submitted with the Bid.

Authorized Signature by or in Behalf of Bidder
(Signature pertains to Part I, only)

PART II
Items Discretionary
for
Bid but Mandatory for Award

The Bidder is directed to submit the following items with the Bid. The failure of the bidder to provide any of these items in proper form by the time set for award may result in the rejection of the Bid.

Initials	Items
	Prices in words and numbers as may be modified to correct discrepancies (or omissions) inserted for each Bid Item in Bid.
	Total Price bid as may be modified to correct discrepancies in the individual bid amounts inserted in Bid in words and numbers.
	Details of bid security inserted in Bid Pages.
	Signature of Bidder on Bid is witnessed.
	Names of signers and witnesses are typed or printed below signatures.
	Corporate acknowledgment on Certificate of Surety and evidence of authority of the signer is attached to Certificate of Surety (N.J.S.A. 40A:11-22 and N.J.S.A. 40A:11-16.3b).
	Certification of Bidder's Status on State Treasurer's List has been completed and submitted.
	Equipment Certification is completed (N.J.S.A. 40A:11-20).
	Duly acknowledged Powers of Attorney are attached to Bid Pages for Bids signed by Attorney-in-Fact.
	For corporate bidders, corporate resolution authorizing the Bid is attached to Bid Pages
	For joint venture bidders, separate Ownership Disclosure Statements are included in the Bid (Pages for each member (N.J.S.A. 52:25-24.2).
	A tabulation of other work now under contract, giving location, type, size, total cost, required date of completion and the percentage of completion (to the date of this bid) of each job.
	Evidence of bidder's compliance with all legal requirements for the bidder to bid and to enter into the Contract (e.g., plumbing contractor compliance with N.J.S.A. 45:15c-12.3(b), electrical contractor compliance with N.J.S.A. 45:5A-9, etc.).
	Evidence, in the case of a partnership, as to whether the partnership is general or limited and identifying the names and addresses of all partners and indicating whether they are general or limited partners.
	Evidence, in the case of a joint venture bidder, as to the parties to the joint venture, a statement of the individual responsibilities of each party to the joint venture agreement and such other information as may be pertinent to each of the joint venturers' responsibility to fulfill the obligations of the Contract. All information and certification required in the Contract Documents shall be separately stated for each member of the joint venture.
	A statement of the largest amount of construction work which the bidder has done in any one year (state the year). Describe experience with similar projects over the last five (5) years. State and describe the projects of equal or greater value during the last five (5) years.
	Certificate(s) of Registration under The Public Works Contractor Registration Act (where applicable) (N.J.S.A.34:11-56.48) for bidder and subcontractors of any tier.
	Non-Collusion Affidavit is correctly filled out, signed on behalf of Bidder and notarized (N.J.S.A. 52:34-15).
	Contractor's Certifications regarding Discrimination, Affirmative Action, SED Utilization and Equal Employment Opportunity completed.
	Business Registration Certificate(s) to comply with the provisions of N.J.S.A. 52:32-44 for bidder and subcontractors of any tier. The Business Registration Certificates shall be provided to the Contracting Agency and that of any named subcontractor prior to the time the contract is awarded, although the

	Business Registration Certificates must be in the possession of the bidder at the time of the bid proposal.
	A signed "Certification for American Iron and Steel Requirements of P.L. 113-76, Consolidated Appropriations Act, 2014" form
	At least one bank reference.
	At least two credit references.
	Such additional information as may be required to establish that the bidder is responsible and is adequately prepared to fulfill the requirements of the Contract.

Part II Certification

I hereby certify that I have enclosed with the Bid, each of the items initialed above.

NOTE: This Part II of the Document Submission Checklist shall be initialed and signed as instructed above and shall be submitted with the Bid .

Authorized Signature by or in Behalf of Bidder
(Signature pertains to Part II, only)

(End of Checklist)

SPECIAL CONDITIONS

0.00 General

The Contractor is warned that the project is in a Commercial/Residential Area. All construction activity must be done with minimum interference to residents and commercial establishments of the project area. Mobilization shall be coordinated with the East Windsor Township and Police.

0.01 Traffic Control

The control of the flow of traffic within the East Windsor Township is the responsibility of the East Windsor Township Police Departments. All orders given by the Police and the Township Engineer must be obeyed by the Contractor. The Contractor must cooperate with the Police Department and the Township Engineer in the use of barricades to detour traffic. The Contractor, when bidding this project, shall not assume that any street can be totally closed for the purpose of this project. The Contractor **may not** close any street to vehicular traffic without notifying and receiving the consent of the Township Engineer, the Police Department and Fire Department, **in writing** at least **24** hours in advance (fax confirmation report required) for facsimile notices.

When the Contractor requires the assistance of the police to direct traffic (for either construction activities or material deliveries), the Contractor shall notify East Windsor Township Police Department, at least 24 hours prior to when the police officer is needed. The East Windsor Township Police Department will make the determination whether a police officer will be required. The Contractor shall fax a confirmation notice to the Engineer **every** time an officer is **requested** for the project. The fax confirmation shall include the anticipated work tasks, the number of officers that are required, the date of the request, the time of the request, and the person at the police station that took the request.

Any off duty police employed for traffic control shall be from the East Windsor Township. If alternates are required, they shall be subject to the approval of the East Windsor Township Police.

Contractor attendance at traffic coordination meetings with the County, East Windsor Township, bus companies, etc., is required.

The Contractor is alerted that certain streets in the East Windsor Township are designated with vehicle weight limitations. The Contractor shall confirm with the East Windsor Township the names of these streets, and shall obey all weight limitation regulations in transporting laborers, equipment, and materials. The Contractor is also alerted to the fact that securing a stockpiling yard near the site shall be his responsibility, and all fees and rental charges shall be included in the unit prices bid.

The Contractor shall obtain "Emergency - No Parking" bags and/or signs from the Police Department in order to place on parking meters along roads that are to be closed for construction.

0.02 Pedestrian Control and Protection

The Contractor shall take whatever measures are necessary to protect the health and welfare of pedestrians on the streets. Such measures shall include, but not limited to surrounding all open trenches with snow fencing or plating after hours, barricades with operable flashing lights, traffic cones, etc., around stockpile materials and equipment. Pedestrian traffic must be maintained and protected. The Engineer reserves the right to order additional pedestrian protection without additional compensation to the Contractor. At least one means of pedestrian thoroughfare will be left available by the Contractor for every area of work.

The Contractor is alerted to the fact that several residential driveways and parking lots exist in the project area. The Contractor shall ensure that access to these driveways is preserved, either by providing plating during construction, or by immediately backfilling the excavation and placing roadstone to grade. The Contractor shall take these hardships into account when preparing his bid, and shall have no claim against the East Windsor Township for this work, other than what may be provided for in the unit prices bid.

0.03 Cleanup of All Streets

Daily, or at the direction of the Engineer, the Contractor shall clean the surface of the streets with appropriate mechanical sweepers. The cleanup shall include all blocks where the Contractor's equipment creates a soil and dust condition on the roadway. No trucks with mud filled tires will be allowed to leave the site. If the streets are not cleaned within 48 hours of being notified, a mechanical sweeper will be hired by the Engineer and the cost of same will be deducted from the Contractor's progress payments.

0.04 Dust Control

The Contractor shall take effective measures, including the use of sprinklers and covered trucks, to minimize dust production and spreading as a result of construction activities on the site and hauling operations off the site. The use of calcium chloride, petroleum products or other chemicals for dust control is prohibited.

As often as required during each working day, and particularly prior to each working day's conclusion, areas under immediate construction (including access roads and other affected areas) will be swept clean and wet down sufficiently to lay dust. In addition, these areas will be wet down during non-working hours (including weekends) as often as required to keep the dust under control. In the event that stockpiled materials are causing dust nuisance, they are to be covered by the Contractor. The Contractor shall maintain such covering in place until the nuisance no longer exists.

0.05 Noise Controls

The Contractor shall take effective measures to minimize noise produced by all construction operations, including the use of properly maintained and operating exhaust mufflers on his construction vehicles, whether used on-site or off-site.

0.06 Air and Water Pollution and Solid Waste Control

The Contractor shall make himself aware of and shall comply with all current local, State and Federal Regulations governing air and water pollution control and solid waste control, including especially, regulations prohibiting open burning of trees, logs, stumps, brush, vegetation and construction debris. These materials shall be removed and disposed of at approved off-site locations. In no case shall any logs, trees, brush, vegetation, wood chips or construction debris be buried on-site. All such materials shall be immediately removed and disposed of at off-site locations.

0.07 Disposal of Excavated and Unsuitable Materials

All materials such as brush, logs, stumps, asphalt, concrete, unusable excavated material, etc., shall be trucked from the site and dumped at approved off-site locations. Hauling and dumping costs shall be borne by the Contractor at no additional cost to the Owner. The use of coverings on trucks hauling materials in various municipalities may be required by local ordinances; however, the Contractor shall have no cause for additional claims due to such requirements. Truck wheels shall be cleaned prior to leaving the site so that no mud or other unsightly materials is left on public roads. Hauling trucks shall be of a suitable type so as not to permit any soft liquid or watery material to drop onto private or public roadways.

0.08 Foreman

The Contractor must have an English speaking foreman on the job site at all times construction is proceeding. The Foreman shall have access to a phone at all times, either at a construction trailer or a mobile phone.

0.09 Storage

The Contractor shall not store any pipe, materials or equipment on the roadway, driveways or sidewalks without the approval of the Police Department and the Township Engineer's office. The Contractor will assume any responsibility for any materials stored on-site.

0.10 Site Dewatering

The Contractor shall use good accepted construction techniques in dewatering the site for the duration of excavation, filling and compaction activities. Choice of methods used for dewatering shall be left to the Contractor with the approval of the Engineer. All excavated areas shall be kept dry during fill placement and compaction operations continuing throughout the entire phase of these activities. The site shall be kept free of infiltration and surface drainage continuously until the finished lines and grades specified on the Contract drawings are reached.

0.11 Trench Box

For this Contract a trench box or movable sheeting shall not be considered as sheeting left in place. Use of a trench box or removable sheeting and additional excavation required to use same shall be included in the various unit bid items.

The Contractor shall comply with all OSHA regulations concerning excavations.

0.12 Erosion and Sediment Control

The Contractor is to comply with all local and State regulations for soil erosion and sediment control, including the New Jersey Department of Agriculture "Soil Erosion & Sediment Control Act," SCS Standards for Soil Erosion and Sediment Control in New Jersey.

All clearing is to be done in such a manner to provide minimum exposure of soils wherever possible. The Contractor is to provide approved mulching and is to take other protective measures as required to protect undisturbed, disturbed and new soils from erosion.

All temporary disposal sites and stockpile areas shall be so located to prohibit runoff of silt and soil to natural water courses. Where necessary, the Contractor shall provide temporary ditching and dikes designed to retain all pumpage and runoff from the site for a period of time sufficient to settle out suspended materials before disposal of this water.

All erosion and sedimentation control measures shall be in place prior to any grading operations or construction of proposed facilities and shall be maintained until construction is complete and the construction area is stabilized. The construction area shall be graded so as to completely prohibit any excavated or fill soils, silts and other materials resulting from construction operations from being carried off and away from the construction area. No other excavation work shall be permitted and no fill shall be brought onto the site until the Engineer has given conditional approval of the Contractor's proposed works for controlling soil erosion and sediment control.

All erosion and sediment control measures shall be maintained until construction is completed. All temporary erosion and sedimentation control devices shall be removed after construction has been completed and the construction area is stabilized (i.e., haybales shall not be allowed to rot in place).

Sewer inlets must be provided with perimeter hay baling or a similar erosion control device.

When ordered by the Engineer, all existing temporary work as specified in the preceding paragraph shall be removed and the site restored and brought to the lines and grades shown on the Contract Drawings.

The following Guidelines and Standards shall be construed to be part of these specifications wherever possible:

1) The New Jersey State Soil Conservation Committee - Standards for Soil Erosion and Sediment Control in New Jersey

2) The United States Department of Environmental Protection - Guidelines for Erosion and Sediment Control Planning and Implementation, (EPA-R2-72-015)

3) Environmental Assessment Requirements for State Assisted Wastewater Treatment Facilities, NJAC 7:22-10.

If effective control of erosion and sediment is not accomplished, in the opinion of the Engineer, additional controls shall be proposed by the Contractor for the Engineer' approval. Failure of the Contractor to provide adequate erosion and sediment controls shall be just cause for stopping construction operations until satisfactory control measures have been implemented.

0.13 Protection of Trees and Vegetation

The Contractor shall make every effort to avoid destruction of and damage to native trees and shrubs not designated to be removed so as not to unduly disturb the ecological or environmental quality of the area.

Straggling roots shall be pruned. Trees which must be pruned shall be cut cleanly and coated with protective tree paint. If trees are damaged, the wood shall be repaired and painted with approved materials.

Trees and shrubs not to be removed shall be protected in an approved manner from any damage due to construction activities.

0.14 Permits and Bonding for Township Streets

The Contractor shall be responsible for obtaining and paying for all road opening permits and bonding as required. Prior to the bid, the Contractor shall make himself fully aware of the requirements and the costs associated with road opening permits for the Township and the type of bonding that is required prior to bidding this project. Bonding requirements for road opening permits shall be included in the various unit bid items. The Contractor shall also make himself familiar with the requirements of trench restoration for Township roads.

0.15 Utilities

The Contractor is advised that there are numerous utilities in the streets and sidewalk areas. The Contractor shall make additional allowances in his bid for hand excavation, support and backfilling around these utilities. No claim will be accepted for additional work for the support, hand excavation, tunneling, jackhammering and all associated work in order to obtain the intent of this project.

The Contractor shall call the utility mark-out number (1-800-272-1000) prior to any excavation.

0.16 Special Environmental Conditions - Sequence of Erosion Control Measures

The sequence of development for environmental work must be rigidly adhered to for adequate environmental protection during and after construction activities. The sequence shall be as follows:

1. Install silt fence-sediment barrier - The silt fence-sediment barrier delineating the construction site shall be put in place where shown on the Contract drawings or as directed by the Engineer, prior to any stockpiling or construction activities. The sediment barrier shall remain erect until all construction and environmental restoration measures have been completed.

2. Inlet Protection - All inlets shall be protected by straw bales or other suitable means as approved by the Engineer. These sediment barriers shall be left in place until all construction activities have been completed and permanent stabilization has been established.

3. Construct Sedimentation Basin - The Contractor shall install adequately sized sedimentation basins prior to the commencement of any dewatering activities as directed by the Engineer or Environmental Observer. The basin shall not be removed until all dewatering has been completed.

4. Protection of stockpiled fill from wind and/or water erosion - Any suitable fill to be stockpiled for longer than fourteen (14) days shall be protected from wind and/or water erosion by suitable methods delineated in the Environmental Specifications.

5. Restoration of storage and stockpile sites - Restoration of storage and/or stockpile sites shall commence as soon as the sites are no longer needed for storage or stockpiling of construction materials.

6. Permanent soil stabilization and vegetative restoration - Permanent soil stabilization and vegetative restoration as shown in the Plans and Specifications, shall commence as soon as possible after construction has been completed.

0.17 Award of Contract

Bidders shall be prepared to submit bonding, insurance, construction schedule, shop drawings and all else required by Contract Documents immediately upon notification that he is the successful Bidder. Any delay in the submission of complete and correct documentation may jeopardize the completion date, and the Contractor will be subject to liquidated damages as stated in the Contract section of this specification.

0.18 Bonds

The Bidder to whom the Owner proposes to award the Contract shall furnish and deliver within ten (10) days of the date of the acceptance of the Proposal, Surety Corporation Bonds, from reputable sureties authorized and licensed to do business in New Jersey and acceptable to the Owner for a) 100% Performance Bond, and b) 100% Maintenance Bond.

NOTE: Approved Performance Bond and Maintenance Bond supplied by a New Jersey licensed Surety Company may be submitted in lieu of the enclosed Performance and Maintenance Bond Forms.

Any change in the plans, specifications or quantities shall in no way vitiate said bond. Said bond shall be in the sum not less than the amount of the bid and shall be maintained by the Contractor until the final acceptance of the work. Date of acceptance of the work shall be determined by the Owner after it shall have duly considered the acceptance report of the Engineer and authorized final payment. The Owner shall not unreasonably withhold acceptance.

0.19 Affirmative Action Requirements

No later than three (3) days after notification of award, but before signing a construction contract the Bidder/Contractor is required to submit to the public agency compliance officer and the affirmative action office an initial project manning table consisting of forms provided by the affirmative action office and completed by the contractor in accordance with N.J.A.C. 12:27-7.

0.20 Wetlands Transition Areas

The Contractor is alerted to the fact that portions of the work on and near the Huntington Drive area are within the 50 foot transition area for freshwater wetlands, as shown on the plans. All work within the wetlands transition area shall be subject to all of the provisions of the NJDEP Freshwater Wetlands General Permit, obtained by the Owner. The Contractor shall consider these site constraints in preparing their bid, and shall not be entitled to additional compensation due to these site constraints.

0.21 Work Hours within Twin Rivers Drive

The Contractor will be required to work within Twin Rivers Drive to complete water main tie-ins. Work within Twin Rivers Drive shall only be permitted between 9 A.M. and 2 P.M. on weekdays, with no exceptions. Contractor shall coordinate required shut downs with the Owner, and shall abide by all restrictions required by the East Windsor Police Department.

0.22 Unsatisfactory Materials/Service

If during the course of this project the Contractor fails to perform or supply materials satisfactorily, a Notice of Unsatisfactory Material/Service (see attached) will be sent to the Contractor. The Contractor is to complete the form and return it to the City within 10 days.

UNSATISFACTORY MATERIALS/SERVICE

If during the course of this project the Contractor fails to perform or supply materials satisfactorily a Notice of Unsatisfactory Material/Service (similar to the form below) will be sent to the Contractor. In addition to actions by the City permitted under this Contract, such notice(s) may be used in determining the Contractor unqualified for future bid awards.

Project Name_____ File #_____

Contractor/Vendor Name:_____

Date:_____

Statement of Problem:_____

_____

_____

_____

Report Prepared By:_____

Authorized Signature:_____
Township Engineer

_____

Contractor to complete and return to East Windsor Municipal Utilities Authority,
7 Wiltshire Drive, East Windsor, New Jersey 08520

Kindly respond within 10 days. Failure to respond may be grounds for disqualification from future project award considerations.

Contractors Answer to Complaint:_____

_____

_____

_____

Authorized Contractors Signature:_____

Date:_____ Title:_____

EAST WINDSOR MUNICIPAL UTILITIES AUTHORITY
MERCER COUNTY, NEW JERSEY
HUNTINGTON DRIVE WATER MAIN REPLACEMENT
STATE LOAN PROJECT NO. XXXXXXX-XX

CONTRACT NO. 2018-01

Table of Contents

Article		Page
Article I	Definitions	CON-1
Article II	Rights and Responsibility of Contractor	CON-3
Article III	Responsibility of Engineer	CON-5
Article IV	Explanations and Work Sequence	CON-6
Article V	Contractor's Representatives, Employees & Office	CON-6
Article VI	Discrepancies, Errors & Omissions	CON-6
Article VII	Insurance	CON-7
Article VIII	Patents and Copyrights	CON-9
Article IX	Registration of Motor Vehicles	CON-9
Article X	Provisions Required by Law Deemed Inserted	CON-9
Article XI	Prevailing	Wages
CON-10		
Article XII	Compliance with Laws	CON-10
Article XIII	Rights-of-Way and Easements	CON-10
Article XIV	Access to the Work, Documents and Information	CON-11

Table of Contents
(Continued)

Article		Page
Article XV	Permits	CON-11
Article XVI	Assignment	CON-11
Article XVII	Subcontracts	CON-12
Article XVIII	Time of Beginning Work	CON-12
Article XIX	Intermediate Times of Completion and Default	CON-12
Article XX	Final Completion	CON-13
Article XXI	Suspension of Work, Delay and No Damages for Delay	CON-13
Article XXII	Damages and Liquidated Damages	CON-14
Article XXIII	Night, Weekend & Holiday Work	CON-14
Article XXIV	Acceleration	CON-15
Article XXV	Illegal Drugs and Intoxicating Liquors	CON-15
Article XXVI	Examination of Work and Testing	CON-15
Article XXVII	Defective Work	CON-15
Article XXVIII	Protection of Work	CON-16
Article XXIX	Mistakes of Contractor	CON-16
Article XXX	Title to Work, Materials and Equipment	CON-16
Article XXXI	Changes	CON-16
Article XXXII	Changes Not to Affect Bond	CON-18
Article XXXIII	Discontinuance of Work	CON-18

Table of Contents
(Continued)

Article		Page
Article XXXIV	Money May Be Retained	CON-18
Article XXXV	Applications for Payment	CON-19
Article XXXVI	Final Estimate and Payment	CON-20
Article XXXVII	Liens	CON-21
Article XXXVIII	Waivers	CON-21
Article XXXIX	Liability of Owner	CON-21
Article XL	Warranty	CON-21
Article XLI	Maintenance Period	CON-22
Article XLII	Legal Address of Contractor	CON-22
Article XLIII	Right of the Owner to Terminate Contract or Give a Three (3) Day Deficiency Notice	CON-23
Article XLIV	Use and Occupancy Prior to Acceptance by Owner	CON-23
Article XLV	Payment for Uncorrected Work	CON-24
Article XLVI	Oral Agreements	CON-24
Article XLVII	Contractor Books and Records	CON-24
Article XLVIII	Disputes	CON-24

EAST WINDSOR MUNICIPAL UTILITIES AUTHORITY
MERCER COUNTY, NEW JERSEY
HUNTINGTON DRIVE WATER MAIN REPLACEMENT

CONTRACT NO. 2018-01

THIS AGREEMENT, made and entered into this _____day of _____, 20____, by and between the EAST WINDSOR MUNICIPAL UTILITIES AUTHORITY, Mercer County, State of New Jersey, party of the first part, hereinafter designated as the Owner, and _____ _____with legal address at _____ _____in the County of _____, State of _____ _____, party of the second part, hereinafter designated as the Contractor.

Owner shall pay Contractor $_____ for completion of the Work in accordance with the Contact Documents equal to the sum as set forth in the Bid form which includes the base bid plus $_____. As provided in Section 1070 – Measurement and Payment, estimated quantities are not guaranteed, and determinations of actual quantities and classification are to be made by Engineer as per the related specification section for the item.

WITNESSETH, that the parties to these presents, each in consideration of the undertakings, promises and agreements on the part of the other herein contained, have undertaken, promised and agreed, and do hereby undertake, promise and agree, the party of the first part for itself and for its successors and assigns, and the party of the second part for itself and for its heirs, executors, administrators, successors and assigns, as follows:

ARTICLE I - DEFINITIONS

Wherever the words defined in this Article, or pronouns used in their stead, occur in the Contract Documents (as defined herein), they shall have the following meanings:

The word "Owner" shall mean the party of the first part above designated or any agency or officer duly authorized to act in its place under this Contract.

The word "Contractor" shall mean the party of the second part above designated, entering into this Contract for the performance of the work required to be performed hereunder, and the legal representatives of the said party, or agents appointed to act for the said party in the performance of the work.

The word "Engineer" shall mean Mott MacDonald, of 111 Wood Avenue South, Iselin, New Jersey, acting through properly authorized agents or project representatives, such agents or project representatives acting within the scope of their authority; or such other engineer named by the Owner in the event that Mott MacDonald is unable to act or ceases to act as the Engineer for the Owner.

The word "Contract" shall mean this Contract No. 2018-01 of the East Windsor Municipal Utilities Authority Mercer County, New Jersey, Water Main Replacement Huntington Drive. The words "Contract Documents" shall mean, collectively, all of the covenants, terms and conditions in this Contract and in the documents which constitute essential parts of this Contract and which are hereby made part hereof as if set forth at length herein, to wit:

I. General Conditions

A. Notice to Bidders
B. Information for Bidders
C. Labor Standards
D. Equal Employment Opportunity
E. Supplemental General Conditions
F. State and Federal Wage Rates
G. Scope of Contract
H. Bid

(1) Schedule of Bid Items
(2) Ownership Disclosure Statement
(3) Contractor's Certification
(4) Certification of Nonsegregated Facilities
(5) Listing of Subcontractors to be Used
(6) Non-Collusion Affidavit
(7) Certification of Bidders Status
(8) Requirement for Certificate of Surety
(9) Certificate of Surety
(10) Bid Bond
(11) Equipment Certification

I. Special Conditions
J. Contract
K. Performance Labor and Material Payment Bond
L. Maintenance Bond
M. Environmental Maintenance Bond
N. Notice of Award
O. Notice to Proceed

II. Specifications

A. General Requirements
B. Detailed Specifications

III. Drawings

The words "Contract Price" shall mean the total amount earned by the Contractor and paid in the final estimate and payment under the Article of the Contract entitled, "Final Estimate and Payment".

The word "Specifications" shall mean, collectively, all of the terms and stipulations contained in the General Requirements and in the Detailed Specifications. The requirements of the General Requirements shall be considered part of each Division of the Detailed Specifications.

The words "Final Completion" or "final completion" shall mean the proper completion of all work, for the entire project as contemplated and provided for under the Contract, sufficient for the acceptance by the Owner. If any items of work shall not have been properly completed, e.g., should any punch list items remain uncompleted, Final Completion shall not have been achieved. The Owner, with the advice of the Engineer, shall fix the date of Final Completion of all the work and shall annotate the date of Final Completion upon the Contractor's final Application for Payment.

The words "Substantial Completion" or "substantial completion" or "substantially complete" shall mean satisfactory completion of the major portions of the Contract work, including, without limitation, inspection and testing and the issuance of any necessary governmental Certificates of Occupancy, so that the facility may be turned over to the Owner for its intended use or occupancy. The date of Substantial Completion shall be certified by the Engineer.

The words "Drawings" and "Contract Drawings" shall mean the drawings which show the character and scope of the work to be performed and which are described in the Article of the Information for Bidders entitled, "Contract Drawings".

The words "General Conditions" shall mean everything hereinbefore defined under the word "Contract Documents", except for the Specifications and the Drawings.

The words "Work" or "work" shall refer to any and all labor, construction, demolition, materials, or equipment to be performed by or furnished by Contractor under the Contract.

Wherever in the Contract Documents the terms "ordered", "directed", "required", "allowed", "permitted", "instructed", "designated", "considered necessary", or terms of like effect or import are used, or the adjectives "reasonable", "suitable", "acceptable", "proper" or "satisfactory" or adjectives of like effect or import are used to describe a requirement, direction, review or judgment of the Engineer as to the work, it is intended that such requirement, direction, review or judgment will be solely to evaluate the work for compliance with the Contract Documents (unless there is a specific statement indicating otherwise). The use of any such term or adjective shall not be effective to assign to Engineer any duty or authority to supervise or direct the furnishing or performance of the work or any duty or authority to undertake responsibility contrary to the provisions of the Article of this Contract entitled, "Responsibility of the Engineer".

ARTICLE II - RIGHTS AND RESPONSIBILITY OF CONTRACTOR

A. General

All work shall be performed in strict accordance with and completed in strict compliance the Contract Documents. Observations, construction review, tests, recommendations, acceptances or approvals by the Engineer or by others, shall in no way relieve the Contractor of the obligation to perform and complete all work in accordance with the Contact Documents.
All work shall be performed under the direction and supervision of the Contractor.

The Contractor shall be solely responsible for the means, methods, techniques, sequences, and procedures of construction except where specific means, methods, techniques, sequences or procedures of construction are required by the Contract Documents.

B. Supervision

The Contractor shall provide and maintain a qualified superintendent, acceptable to the Owner, at all times during the progress of the work and such superintendent shall give efficient supervision to the work until its completion.

The superintendent shall have full authority to act in behalf of the Contractor, and all communications and instructions given to the superintendent shall be considered as given to the Contractor. It shall be the responsibility of the Contractor's superintendent to coordinate the work of the Contractor with the work of the Contractor's subcontractors and with the work of other contractors and subcontractors working on the site.

The superintendent shall be present at the construction site at all times so as to ensure the proper performance and coordination of the Contractor's work and that of its subcontractors.

C. Use and Care of Construction Site and Property

The Contractor shall ensure that its personnel and equipment and those of its subcontractors, materialmen, suppliers, etc., shall enter only the land and areas identified in and expressly permitted by the Contract Documents. The Contractor shall further ensure that the use of the construction site or any other lands or areas to which the Contractor or any of its personnel, equipment, subcontractors, materialmen, suppliers, etc., are permitted entry (including, without limitation, easement and right-of-way areas), shall be limited to the uses permitted by the Contract Documents and such uses shall be conducted in the manner required by the Contract Documents.

The Contractor shall be fully responsible for all damage to the construction site and any other lands or areas (including, without limitation, any improvements, monuments, structures, trees or shrubs thereon) damaged by, in connection with or in any way related to the performance of the work. Any injury or damage to the same shall be made good at the Contractor's expense.

The Contractor shall not enter upon or use private property for any purpose without obtaining the written permission of the owner.

The Contractor is responsible for locating all underground structures and facilities (whether shown in the Contract Drawings or not), for coordinating the work with the owners of such underground structures and facilities, for the safety and protection thereof, and for repairing any damage thereto resulting from or in any way connected with the work. The Contractor shall protect carefully from disturbance or damage all monuments and property markers until the Engineer has witnessed or otherwise referenced their location and consented to their removal in writing. The cost of such location, coordination, safety, protection and repair is deemed to be included in the accepted bid price for this Contract.

D. Safety

The Contractor shall be solely responsible for initiating, maintaining and supervising all safety precautions and programs in connection with the work and for construction site safety, generally. The Contractor shall be solely responsible for and shall take all precautions for the safety of all persons on the work and other persons who may be affected thereby. The Contractor shall provide the necessary protection to prevent damage to all work and materials and equipment to be incorporated in the work and all other property at the construction site and at lands and areas which the Contractor is authorized to enter under the Contract Documents. These requirements will apply continuously 24 hours per day until final acceptance of the work by the Owner.

The Contractor shall comply with all applicable laws and regulations of any public body having jurisdiction for the safety of persons or property in or about the construction site and to protect them from damage, injury or loss; and shall erect and maintain all necessary safeguards for such safety and protection.

The Engineer's observation of the Contractor's performance of the work is to be solely in behalf of the Owner and not in behalf of the Contractor and is not intended to relieve or absolve the Contractor for any inadequacy of the Contractor's safety measures or safety plan(s).

E. Indemnification

The Contractor shall indemnify, defend, save and hold the Owner, Engineer and their consultants, and the officers, employees and agents of each of them and all owners of property upon which work is being performed hereunder pursuant to easement or right-of-way agreements, harmless from and against any damage, liability, loss, costs (including but not limited to attorneys' fees and court and arbitration costs) or claims arising out of, resulting from or related to, the performance or nonperformance of the work provided for in the contract documents, except to the extent such claims arise from the negligence of the Owner, the Engineer, or their consultants, officers, employees or agents. The Contractor's indemnification obligations shall not be limited by the amounts of insurance required to be carried by the Contractor under this Contract.

The Contractor shall indemnify and save harmless the Owner and Engineer and all persons acting for or on behalf of them from all claims and liability of any nature or kind, including costs and expenses arising from or occasioned by any infringement or alleged infringement of patent rights on any invention, process, article or apparatus, or any part thereof, furnished and installed by said Contractor or arising from or occasioned by the use or manufacture thereof, including their use by the Owner.

These Indemnifications are intended to provide the broadest indemnification permitted by law and shall be construed consistent with all applicable laws, including but not limited to the laws pertaining to indemnification. These indemnification provisions shall survive the completion and acceptance of the Contract, and shall be effective until the statutes of limitation and repose have run.

ARTICLE III - RESPONSIBILITY OF THE ENGINEER

The Engineer shall initially decide, as an independent professional, questions which may arise as to the quality, quantity and acceptability of materials furnished, acceptability of the work performed, rate of progress of the work, interpretation of Drawings and Specifications and items related thereto, as provided herein. The duties and responsibilities of the Engineer as set forth herein shall not be extended except through written consent of the Engineer and the Owner.

a. Observation of the Work: The Engineer will make visits to the construction site at intervals appropriate to the various stages of construction to observe the progress and quality of the executed work and to determine, in general, if the work is proceeding in accordance with the Contract Documents. The Engineer will not be required to make exhaustive or continuous on-site inspections to check the quality or quantity of the work. The Engineer shall be provided access to all parts of the work and shall be furnished with such information and assistance by the Contractor as the Engineer may require to make its observations and construction review. The Contractor shall also make all materials and equipment available at all times for observation by the Engineer. Observations may be made at the source of material or supply, whether mill, plant or shop, as well as at the construction site. The Engineer will keep the Owner informed of the progress of the work and will endeavor to guard the Owner against defects and deficiencies in the work.

b. Acceptability of Work: The Engineer shall have authority to disapprove or reject work which the Engineer believes to be defective work or work not in accordance with the Contract Documents and shall also have authority to require special inspection or testing of the work as authorized in the Contract Documents, whether or not the work is fabricated, installed or completed. The Contractor agrees to abide by the Engineer's decisions relative to the acceptability of the work.

c. Engineer's Decisions: The Engineer will be the initial interpreter of the requirements of the Contract Documents and judge of the acceptability of the work thereunder in behalf of the Owner. Claims, disputes and other matters relating to the acceptability of the work or the interpretation of the requirements of the Contract Documents will be referred to the Engineer

in writing with a request for a formal decision in accordance with this subparagraph, which the Engineer will make within a reasonable time. Written notice of each such claim, dispute or other matter will be delivered by the claimant to the Engineer and to the other party promptly (but in no event later than thirty (30) days) after the occurrence of the event giving rise thereto, and adequate written supporting data will be submitted to Engineer within sixty (60) days after such occurrence unless the Engineer allows an additional period of time to ascertain more accurate data in support of the claim. The rendering of a formal decision by the Engineer with respect to any such claim, dispute or other matter will be a condition precedent to any exercise by the claimant of such rights or remedies as it may have under the Contract Documents or by laws or regulations in respect of any such claim, dispute or other matter.

d. Limitations of Engineer's Responsibilities: Neither the Engineer's authority nor responsibility under the Contract Documents shall give rise to any duty or responsibility of the Engineer to the Contractor, or any subcontractor or materialman of the Contractor, or to any other person performing any of the work. The Engineer will not be responsible for the Contractor's means, methods, techniques, sequences or procedures of construction, or the safety precautions and programs incident thereto, or for construction site safety generally, and the Engineer will not be responsible for the Contractor's failure to perform or complete the work in accordance with the Contract Documents. The Engineer will not be responsible for the acts or omissions of the Contractor or of any subcontractor, any materialman, or any other person performing or furnishing any of the work. Nothing herein shall be construed to increase, change, limit or reduce the Engineer's obligations to Owner as set forth in prior consulting agreements or contracts relating to this project.

ARTICLE IV - EXPLANATIONS AND WORK SEQUENCE

The Engineer shall make any explanations, clarifications and interpretations, requested in writing by the Contractor and considered necessary by the Engineer, as to the meaning and intention of the Contract Drawings and Specifications. Such explanations, clarifications and interpretations shall be consistent with or reasonably inferable from the overall intent of the Contract Documents.

The Contractor's order or sequence of execution of the work and the general conduct of the work shall be subject to the disapproval of the Engineer. The Engineer shall have authority to direct the Contractor that changes in the Contractor's means, methods, techniques, sequences or procedures of construction are necessary to accord with the intent of the Contract Documents or with good construction practice. However, the Engineer shall not be required to advise the Contractor on the substitute means, methods, techniques, sequences or procedures of construction to be utilized or on how the Contractor may overcome any particular problems or difficulties, but the Contractor shall have the responsibility to make proposals in this regard for the consideration of the Engineer.

The Contractor must consult with the Engineer as to sequence of work and intermediate times of completion as set forth in the Schedule of Intermediate Completion Times. The Contractor is hereby notified that the approved Construction Schedules must be considered

the general sequence of the work and the Engineer may request that they be amended, supplemented or modified from time to time during the period of construction to accord with the intent of the Contract Documents, good construction practice, and the actual progress of the work.

Such changes, amendments, supplements or modifications shall in no way entitle the Contractor to additional compensation or affect the responsibility of the Contractor for the work.

ARTICLE V - CONTRACTOR'S REPRESENTATIVES, EMPLOYEES & OFFICE

The Contractor shall at all times enforce strict discipline and good order among the Contractor's employees and those of its subcontractors (of any tier) and materialmen and shall not employ on the work any unfit person or anyone not skilled in the task assigned them.

The Contractor shall maintain an office at the site of the work, where copies of the Contract Documents and of all working drawings shall be kept available for use at any time.

ARTICLE VI - DISCREPANCIES, ERRORS & OMISSIONS

The Contract Documents are intended to be mutually explanatory of each other, but should any discrepancy appear or any contradiction arise or be detected by the Contractor as to anything contained therein, the Contractor shall promptly call the same to the attention of the Engineer and the Contractor shall be deemed to have bid the Contract predicated on the more expensive way of performing such work and the interpretation and decision of the Engineer shall be binding on the Contractor. The Contractor shall be held responsible for all corrective measures and associated costs for failure to notify the Engineer of such discrepancy or contradiction.

Any correction of errors or omissions in the Contract Documents may be made by the Engineer when such correction is necessary for the proper fulfillment of the Contract as construed by him. Except as otherwise provided in this Article, where said correction of errors or omissions materially adds to the cost of or time required for the work to be done by the Contractor, compensation for said additional work and/or an extension of time may be granted under the Article of this Contract entitled, "Changes".

If any item of work is required by the Drawings but is omitted in the Specifications, such item shall be required. If any item of work is required by the Specifications but omitted in the Drawings, such item shall be required. If any item of work is omitted both in the Drawings and Specifications, whether intentionally or otherwise, when the same is usually and customarily required to complete fully the work specified herein, such item shall be required. None of the foregoing shall entitle the Contractor to extra compensation or an extension of time, but the said items of work shall be provided as if called for by all of the Contract Documents.

ARTICLE VII - INSURANCE

In accordance with the provisions of the Article of the Information for Bidders entitled, "Failure to Enter Contract", as a condition precedent to the Owner's obligation to execute this Contract, the Contractor is required to submit evidence (consisting of Certificates of Insurance, Insurance Binders, and such other information and/or documentation that may be requested by the Owner) satisfactory to the Owner showing that the Contractor has obtained all insurance coverages required herein. Neither the Contractor nor any of the Contractor's agents, employees or subcontractors are permitted to enter the site or to perform any work on the Contract unless all of the insurance required by the Contract Documents is in effect.

Nothing contained in this Article entitled, "Insurance" or in the Contract Documents shall be construed as limiting the extent of the Contractor's liability for claims or damages resulting from or related to the Contractor's operations under this Contract.

All insurance required hereunder (except Workers' Compensation Insurance policies) shall include the interests of the Owner; Contractor; Engineer and Engineer's consultants, State of New Jersey and its agencies, employees and officers, all of whom shall be listed as additional insureds on such policies. Contractor waives all rights of subrogation against the Owner; Engineer and all parties named as additional insureds in such policies for all losses and damages caused by any of the perils covered by such policies and all such policies shall contain provisions to the effect that in the event of payment of any loss or damage the insurer will have no rights of recovery against any of the parties named as additional insureds.

The Contractor acknowledges that the Owner, Engineer and Engineer's consultants have insurable interests in the project under the Contractor's insurance policies.

The Contractor shall purchase and maintain, at its sole expense, insurance as will provide protection from claims and liabilities which may arise out of or result from Contractor's performance and furnishing of the work and Contractor's other obligations under the Contract Documents, whether it is to be performed or furnished by Contractor, by any of Contractor's subcontractors or sub-subcontractors (of any tier), by anyone directly or indirectly employed by any of them to perform or furnish any work, or by anyone for whose acts any of them may be liable, with companies satisfactory to the Owner, as follows:

a. Worker's Compensation and Employer's Liability Insurance - covering all of the Contractor's employees directly or indirectly engaged in the performance of this Contract. This insurance shall comply with the statutory requirements of the State or States involved and shall have an Employer's Liability Insurance limit of not less than $500,000 for bodily injury by accident, $500,000 for occupational disease and $500,000 aggregate limit.

b. Commercial General Liability Insurance - shall include Bodily Injury and Property Damage. Combined Single Limit with a limit no less than $1,000,000 for any one occurrence, $2,000,000 General Aggregate and $2,000,000 Products and Completed Operations Aggregate. Personal injury coverage must be included with a $1,000,000

limit. A Per Project Aggregate must be included. Broad Form Property Damage Insurance must be included. Contractual Liability Insurance must be included, expressly insuring the Contractor's liability for occurrences assumed by the Contractor under the indemnification clause set forth in the Article of the Contract entitled, "Rights and Responsibility of Contractor", to the extent covered by the standard form of Commercial General Liability policy in New Jersey. Completed Operations Coverage must be provided for a minimum of 2 years from completion of the project.

c. Comprehensive Automobile Liability Insurance - covering Contractor for claims arising from all owned, hired and non-owned vehicles with a limit of not less than $1,000,000 combined single limit for bodily injury and property damage.

d. Umbrella Liability Insurance - providing coverage at least as broad as that provided by the Commercial General Liability Insurance, Comprehensive Automobile Liability Insurance and Employers Liability Insurance required in a., b., and c. above, with a limit of not less than $3,000,000 per occurrence and $3,000,000 aggregate.

e. Builder's Risk Insurance - covering the project under construction in an amount equal to the accepted total bid price of the Contract. The insurance shall cover all risks of physical loss and damage including but not limited to theft, vandalism and malicious mischief, collapse, earthquake, flood and water damage, and shall include damages, losses and expenses arising out of or resulting from any insured loss incurred in the repair or replacement of any insured property (including but not limited to fees and charges of engineers, architects, attorneys and other professionals). The insurance may have a deductible not to exceed $10,000.00 which shall be borne by the Contractor.

f. Policy Limits - specified above are minimum, and wherever the law requires higher limits, the higher limits shall govern.

g. Periods of Coverage - The Builder's Risk Insurance shall remain in full force and effect until Substantial Completion shall have been certified by the Engineer, provided, however, that such coverage shall not be terminated unless and until the Owner shall have acknowledged in writing to the Contractor that the Owner's insurers have placed permanent insurance for the facility. All other policies required under this Contract shall remain in full force and effect until the Contractor's Maintenance Bond has been released.

h. Certificates of the insurance required above must be filed with the Owner with a copy to the Engineer before the Contract is signed on behalf of the Owner. All Certificates of Insurance must provide for a minimum thirty (30) days prior written notice to the Owner of any policy cancellation, material change, or non-renewal.

i. Forms of Policies - all liability insurance shall be on an occurrence basis.

j. Subcontractors - shall be required by the Contractor to provide the following insurance:

(1) Worker's Compensation and Employer's Liability Insurance - covering all of the subcontractor's employees directly or indirectly engaged in the performance of this Contract. This insurance shall comply with the statutory requirements of the State or States involved and shall have an Employer's Liability Insurance limit of not less than $500,000 for bodily injury by accident, $500,000 for occupational disease and $500,000 aggregate limit.

(2) Commercial General Liability Insurance – shall include Bodily Injury and Property Damage. Combined Single Limit with a limit of not less than $1,000,000 for any one occurrence, $2,000,000 General Aggregate and $2,000,000 Products and Completed Operations Aggregate. Personal Injury coverage must be included with a $1,000,000 limit. A Per Project Aggregate must be included. Broad Form Property Damage must be included.

(3) Comprehensive Automobile Liability Insurance - covering subcontractor for claims arising from all owned, hired and non-owned vehicles with limits of not less than $1,000,000 aggregate for bodily injury and property damage.

(4) Policy Limits - specified above are minimum, and wherever the law requires higher limits, the higher limits shall govern.

(5) Periods of Coverage - All policies required under this Contract for subcontractors shall remain in full force and effect until the Contractor's Maintenance Bond has been released.

(6) Certificates of Insurance and Insurance Binders as well as any additional information and/or documentation requested by the Owner, of the insurance required above must be filed with the Owner and the Engineer, in triplicate, before the subcontractor is permitted to start work. The State of New Jersey and its agencies, employees and officers, Owner and Engineer must appear as additional insureds on all liability policies. All Certificates of Insurance and Insurance Binders must provide for a minimum thirty (30) days prior written notice to the Owner and Engineer of any policy cancellation, material change, or non-renewal.

The Contractor shall not allow any subcontractor to commence work on his subcontract until all insurance required of the subcontractor has been so obtained and the proper Certificates of Insurance and Insurance Binders have been provided to the Owner and Engineer.

Acceptance of the Contractor's insurance by the Owner shall not relieve or decrease the liability of the Contractor hereunder.

ARTICLE VIII - PATENTS AND COPYRIGHTS

The Contractor shall pay all license fees and royalties and assume all costs incident to the use in the performance of the work or the incorporation in the work of any invention, design,

process, product or publication which is the subject of patent rights or copyrights held by others. The Contractor shall provide the Owner with the vested rights to use such inventions, designs, processes, procedures or publications, as are related to the Work, in perpetuity.

The Contractor shall indemnify and save harmless the Owner and Engineer, and all persons acting for or on behalf of them, from all claims and liability of any nature of any kind, including costs and expenses, arising from or occasioned by any infringement or alleged infringement of patent rights or copyrights on any invention, design, process, product or publication, or any part thereof, furnished or installed or used in the performance of the work by said Contractor or arising from or occasioned by the use or manufacture thereof, including their use by the Owner.

These provisions shall survive the completion and acceptance of the Contract, and shall be effective until the statutes of limitation and repose have run.

ARTICLE IX - REGISTRATION OF MOTOR VEHICLES

All motor vehicles used in connection with this Contract shall be registered in the State of New Jersey, to the extent required by the laws, rules or regulations of the State of New Jersey.

ARTICLE X - PROVISIONS REQUIRED BY LAW DEEMED INSERTED

Each and every provision and clause required by law to be inserted in this Contract shall be deemed to be inserted herein as if set forth at length herein, and the Contract shall be read and enforced as though it were included herein, and if through mistake or inadvertence or otherwise any such provision is not inserted, or is not correctly inserted, then upon the application of either party, the Contract shall forthwith be physically amended to make such insertion and such adjustment shall made without adjustment of the Contract Price or the time for performance of the Contract.

ARTICLE XI - PREVAILING WAGES

The Contractor shall pay not less than the prevailing wage rates as required by the New Jersey Prevailing Wage Act, the Article of the Information for Bidders entitled, "State Wage Rates" and the Contractor shall comply with the applicable provisions of the Public Works Contractor Registration Act, P.L. 1999, c. 238 (N.J.S.A. 34:11-56.25).

All laborers, workers and mechanics shall be paid not less than the prevailing rate of wage established by law for the type of work to be done in the place in which it is or is to be performed. The Contractor is obligated to pay the higher of the State or Federal wage rates. The violation of the foregoing provision shall constitute a breach of the Contract, and the foregoing provision shall be considered to be a contract for the benefit of the workers, laborers and mechanics, upon which such laborers, workers and mechanics shall have the right to maintain an action against their employers for the difference between the prevailing

rate of wage and the rate of wage actually received by them. Any such action by the workers shall be against their respective employers and not against the Owner or Engineer.
In the event it is found that any workman, employed by the Contractor or any subcontractor covered by this Contract, has been paid a rate of wages less than the prevailing wage required to be paid by this Contract, the Owner may terminate the Contractor's or subcontractor's right to proceed with the work, or such part of the work as to which there has been a failure to pay required wages and to prosecute the work to completion or otherwise. The Contractor and his sureties shall be liable to the Owner for any excess costs occasioned thereby.

ARTICLE XII - COMPLIANCE WITH LAWS

The Contractor shall keep itself fully informed of all existing and future federal and state laws and municipal ordinances and regulations in any manner affecting the work, those engaged or employed in the work, the materials used in the work, or in any way affecting the conduct of the work, and of all orders and decrees of bodies or tribunals having any jurisdiction or authority over the same. If any discrepancy or inconsistency is discovered in the Contract Documents pertaining to the work in relation to any such law, ordinance, regulation, order or decree, the Contractor shall forthwith report the same to the Engineer in writing.

The Contractor shall at all times observe and comply with and cause all its subcontractors agents and employees to observe and comply with, all applicable statutes, regulations, ordinances, orders and decrees in effect prior to or during the life of this Contract and shall indemnify the Owner and the Engineer, and their officers, agents and employees against any claim or liability arising from or based upon the violation or alleged violation of such statute, regulation, ordinance, order or decree, whether by himself, his subcontractors, or their agents or employees.

The provisions of the U.S. Occupational Safety and Health Act (OSHA) and its implementing regulations and all safety standards promulgated thereunder shall be observed by the Contractor in the performance of the Contract, whether or not they would otherwise be applicable.

ARTICLE XIII - RIGHTS-OF-WAY AND EASEMENTS

The Owner will obtain such rights-of-way and easements from federal, state, county, municipal and any other public authorities, railroad and utility companies and all other property owners, as are indicated in the Contract Documents. The Contractor shall inform himself of the location and extent of such rights-of-way and easements.

Any land, access, right-of-way or easement, not specifically shown in the Contract Documents as being furnished by the Owner, that may be required by the Contractor for temporary construction facilities or for storage of materials, shall be provided by the Contractor with no cost or liability to the Owner and the Contractor shall indemnify the

Owner and the Engineers from and against all claims and liabilities arising out or connected therewith.

The Contractor is responsible for the restoration of rights-of-way and easement areas provided under the Contract Documents to good condition and as near to the original condition prior to disturbance by the Contractor as practicable. The required restoration includes, without limitation, the restoration of roads and other structures, trees, shrubbery, lawns and environmental features. Such restoration is a part of the Contract work and shall be included in the coverage of the Contractor's bonds.

ARTICLE XIV - ACCESS TO THE WORK, DOCUMENTS AND INFORMATION

The Contractor shall provide the representatives of the Owner, the Engineer, and testing agencies and governmental agencies with jurisdictional interests, with access to the work under this Contract, whenever it is in preparation or progress, for observation, inspection and testing. The Contractor shall provide proper facilities and safety protections for such access.

ARTICLE XV - PERMITS

Unless otherwise provided in the Contract Documents, the Contractor shall obtain and pay for all construction permits and licenses, including, without limitation, building permits, road opening permits and blasting permits. The Owner will reimburse the Contractor for the direct cost of obtaining such permits. The Contractor shall obtain the consent of and shall bear the charges of all utilities and agencies involved for connections with the work. Any performance bonds or sureties required for the Permit will be paid for by the Contractor and not reimbursed by Owner.

The Owner will apply for and pay for any other necessary permits (other than the construction permits referred to above) from the following agencies and the Contractor will assist the Owner, when necessary, in obtaining such permits:

- N.J. Department of Environmental Protection (Safe Drinking Water Permit)
- N.J. Department of Environmental Protection (Freshwater Wetlands)
- N.J. Department of Environmental Protection (NJPDES Discharge to Surface Water – if Required)
- County Soil Conservation District

The conditions pertaining to construction activity made part of any such permits shall be considered conditions of the Contract and the Contractor shall comply with them without additional charge. Additional costs associated with a permit resulting from the construction activity which is beyond that stipulated in the Contract shall be the responsibility of the Contractor.

The methods of construction to be utilized by the Contractor must satisfy the requirements of the agencies having jurisdiction. Generally, the "methods of construction" are defined as the means to be employed by the Contractor to obtain the end results required by the design.

Whenever requested, the Contractor shall assist the Owner in the acquisition of permits.

The Contractor shall, at its own expense, post obtain the consent of and shall bear the charges of all necessary sureties required by the utilities and agencies issuing involved for connections with the work.

The Contractor shall notify, cooperate with and arrange for inspections from all agencies having jurisdiction over the work.

ARTICLE XVI - ASSIGNMENT

The Contractor shall not assign, transfer, convey, hypothecate, or otherwise dispose of this Contract, or his right, title or interest in or to the same or any part thereof, without the prior express consent, in writing, of the Owner, and the Contractor shall not assign, by power of attorney or otherwise, any of the moneys to become due and payable under this Contract unless by and with the like consent of the Owner. Consent by the Owner to an assignment of this Contract shall not, in any way, release the Contractor from the conditions, covenants and agreements herein undertaken to be done and performed by the Contractor, but such duty to perform shall continue as though such assignment had not been made.

ARTICLE XVII - SUBCONTRACTS

At the times set forth in the Contract Documents for certain subcontractors (See "Listing of Subcontractors to be Used" in Proposal Pages), and when requested by the Owner for other subcontractors, but in any case (for all subcontractors) prior to the subcontractor's being permitted to enter the construction site or to perform any work, the Contractor shall submit, in writing, to the Owner and the Engineer, the names and addresses of all subcontractors proposed for the work. The Contractor shall also submit to the Owner at such time(s) satisfactory evidence of the required insurance coverage for each proposed subcontractor.

Subcontractors named under N.J.S.A. 40A:11-16 may not be changed except at the request of or with the express prior written approval of the Owner for good cause shown. The Contractor shall be fully responsible to the Owner and Engineer for the acts and omissions of the Contractor's subcontractors (of any tier), materialmen and other persons and organizations performing or furnishing any of the work and of their direct and indirect employees, to the same extent as Contractor is responsible for its own acts and omissions and those of its agents and employees. The Contract Documents shall not be construed as creating any contractual relation between any subcontractor (of any tier) and the Owner or Engineer.

The Contractor shall bind every subcontractor in writing to the terms of the Contract Documents applicable to the subcontractor's work and the Contractor shall require every subcontractor so to bind every sub-subcontractor of any tier. In such writing the subcontractor or sub-subcontractor (as the case may be) shall be required to indemnify, for the actions or omissions of such subcontractor or sub-subcontractor in the performance of its

work, the indemnities identified in the Clause of this Contract entitled, "Rights and Responsibility of Contractor", in the Subclause entitled, "Indemnification", to the same extent as the Contractor is required to indemnify such indemnities for claims and liabilities arising out of or in connection with the Contractor's work.

For convenience of reference and to facilitate the letting of Contracts and subcontracts, the Specifications are separated into titled sections. Such separation shall not, however, operate to make the Owner or the Engineer arbiters to establish limits of responsibility in the subcontracts between the Contractor and his subcontractors or sub-subcontractors.

ARTICLE XVIII - TIME OF BEGINNING WORK

The Contractor shall commence work within ten (10) days after receipt of written Notice to Proceed from the Owner.

ARTICLE XIX - INTERMEDIATE TIMES OF COMPLETION AND DEFAULT

The Contractor hereby warrants that it will complete the Contract within the overall time period as set forth in the Contract Documents. It further warrants that it will complete its construction work as set forth in the Schedule of Intermediate Completion Times set forth in the Article of the Information for Bidders entitled, "Time Limit" and "Damages", in the Special Conditions and any amendments, addenda, supplements and modifications thereto.

The time set forth therein and elsewhere for final completion and acceptance of the various phases of the work are hereby made "time of the essence". In the event that Contractor fails to complete work within the time period required, at the option of the Owner, the Contractor shall be in default of this Contract.

In the event that the Contractor defaults in meeting a time period as set forth herein then the Owner shall, at any time thereafter before the Contractor has timely achieved a subsequent Intermediate Completion Time and before the full completion of the Contract, have the option of terminating the Contract. In the event that the Owner so terminates the Contract, the Contractor shall be paid for only such work installed under the terms of the Contract, as shall be determined by the Engineer, and shall not be entitled to any additional monies for loss of profit for the work to be performed under the terms of the Contract. The Owner shall withhold any payments due to the Contractor at the time of such termination until such time the Owner enters into an agreement for the balance of the work. In the event that the Owner, in accordance with the bids received, awards the Contract to the lowest responsible bidder which requires the Owner to pay for the balance of the work to be done in excess of the amount which was to be paid the Contractor for balance of work, as determined by Engineer, then the Owner shall be authorized to apply any monies of the Contractor retained by the Owner toward this difference, remitting to Contractor the balance if any. In the event that such monies are insufficient to cover the said difference, the Contractor shall promptly pay any deficiency to the Owner.

In the event that the Owner elects not to declare Contractor in default, then Owner shall not be required to pay Contractor any monies for work performed by Contractor until such time that Contractor overcomes his delay and completes the work in accordance with a subsequent Intermediate Completion Time or completes the whole of the work.

The Owner's remedies under this Article are in addition to and not in lieu of the Article of this Contract entitled, "Damages and Liquidated Damages".

ARTICLE XX - FINAL COMPLETION

The Contractor's rate of progress shall be such that the Base Bid work shall be finally completed in accordance with the terms of this Contract within the time limit established for the project starting from the Contractor's receipt of the Notice to Proceed, unless and except as the Contractor shall be granted to an extension of time under the Article of this Contract entitled, "Suspension of Work, Delay and No Damage for Delay" or under the Article entitled, "Changes".

It is expressly understood and agreed by and between the Contractor and the Owner, that the Contract time for the completion of the work and the intermediate Completion Times described in the Contract Documents are reasonable times taking into consideration the climatic conditions, economic conditions, labor force and other factors prevailing in the locality of the work.

The time in which this contract is to be performed and completed and the Intermediate Completion Times are of the essence of this Agreement.

ARTICLE XXI - SUSPENSION OF WORK DELAY AND NO DAMAGES FOR DELAY

If the Contractor is delayed at any time in the progress of the work for any of the following reasons, then the Time of Completion may be extended for such reasonable time as the Owner may decide, provided, however, that in no case shall the additional time exceed the time of the delay; but the Contractor shall have no right to, nor shall he make any claim whatsoever for damages, additional compensation or costs of any type by reason of the delay if caused by:

(1) Lock-outs, strikes, fire, unavoidable casualties, war, natural disasters, acts of terrorism, civil or political disturbances; or

(2) The negligence, tortious conduct, other wrongful acts or the default of other contractors, subcontractors, utility companies, or other companies or businesses, or their employees, agents or assigns, involved in the Project.

In the event that the delay is caused by the Owner's negligence, bad faith, active interference, or tortious conduct, the Contractor may make a claim for its damages caused by said delay. The Owner will review and evaluate the merits of each claim submitted. The Owner will endeavor to work cooperatively with the Contractor to resolve these issues in a timely manner.

The Contractor shall, as a condition precedent to any entitlement to an extension of time, notify the Engineer and the Owner in writing, as soon as possible but in any case within four (4) calendar days of the beginning of the delay, referencing this Article, the precise cause or causes of the delay, and any measures taken or to be taken to prevent or minimize the delay. The Contractor shall, as a further condition precedent to any entitlement to an extension of time, provide the Engineer and the Owner, in writing, as soon as possible and in any case within thirty (30) calendar days of the delay, the full particulars of the delay. The Contractor shall take all necessary action to prevent or minimize any such delay. The burden of proving that any extension of time is warranted shall rest with the Contractor.

ARTICLE XXII - DAMAGES AND LIQUIDATED DAMAGES

The parties acknowledge that in the event of a default in performance by the Contractor it is foreseeable that the Owner will suffer damages for which it is entitled to be compensated, both by virtue of the provisions of this Contract and as a matter of applicable law. Certain of these damages may be reasonably ascertaining. Others shall consist of intangible losses which are difficult of calculation, including but not limited to revenue losses and general and administrative costs. For these intangible losses, in the event the Contractor fails satisfactorily to complete all work for the entire project as contemplated and provided for under this Contract on or before the time wherein final completion is required under the terms of the Contract Documents, the Contractor shall be liable for, and the Owner may deduct from the Contract price, the sum of $500.00 as liquidated damages for each calendar day (Sundays and legal holidays included) of delay. Such damages shall continue for the period of time that final completion has not been met and the sum thereof is hereby, in view of the difficulty of estimating such damages, fixed and determined as liquidated damages which the Owner will suffer by such time delay. The sum determined pursuant to this paragraph is not a penalty but an attempt reasonably to forecast the potential harm due to intangible losses caused by delay. The Contractor acknowledges that in submitting its bid and in setting the amount thereof it has ascertained the risk of nonperformance under this Article to the same extent as if the Contractor and the Owner had negotiated the amount of liquidated damages at arm's length.

In addition to and not in lieu of liquidated damages for the intangible costs of delay, the Contractor shall be liable for compensatory damages as allowed by law and in addition as hereinafter provided.

The Contractor agrees that, as compensatory damages due on account of delay in performance of the Contract, the Contractor shall be liable for and the Owner may deduct from the Contract Price the actual costs, resulting from the Contractor's failure to complete the work contemplated herein within the time provided, for payment for the services of

construction observers necessarily employed on the work and for the services of the Engineer for any number of days in excess of the time allowed in the Contract Documents and for payment for all fines and penalties of whatever description imposed by the State of New Jersey or other governmental agency.

If the amounts of liquidated or compensatory damages due from the Contractor exceed the amounts of all monies due and to become due to the Contractor, the Contractor or his Surety shall pay the balance to the Owner.

ARTICLE XXIII - NIGHT, WEEKEND & HOLIDAY WORK

The Contractor shall notify the Engineer in advance of the nature and timing of the work which it intends to do during nights or on weekends or holidays.

No night, weekend or holiday work shall be conducted in violation of law, including, without limitation, applicable noise restrictions.

The Contractor shall not be entitled to compensation beyond the bid amount for any costs incurred for work done during nights, weekends or holidays in order to accommodate the Owner's operational requirements.

Except where it is necessary for the Contractor to work nights, weekends, and holidays, as indicated above, the Contractor shall not schedule work to be done at night or on weekends or holidays except for the usual protective work such as pumping, tending of lights and heating apparatus, etc.
The Contractor's attention is called to the fact that certain aspects of the construction work may have to be scheduled outside of normal working hours due to operational requirements of existing facilities and the Owner's ability to interrupt or modify existing operations. The Contractor may be obligated to work nights, weekends, or holidays to accommodate the Owner's operational requirements.

ARTICLE XXIV - ACCELERATION

If, in the opinion of the Owner, upon the advice of the Engineer, the Contractor is not making sufficient progress to complete this Contract within the time specified in the Contract Documents, based upon the remaining time within which the work is required to be completed, the Owner may, after giving written notice to the Contractor, require the Contractor to accelerate its performance and employ sufficient means and make sufficient progress so that final completion will be achieved by the time required by the Contract Documents.

Neither the Owner so notifying the Contractor, nor the Owner's failure to notify the Contractor shall in any way relieve the Contractor from its obligation to complete its performance in a timely manner.

The Contractor shall not be entitled to any additional compensation by reason of such acceleration.

ARTICLE XXV - ILLEGAL DRUGS AND INTOXICATING LIQUORS

The Contractor shall strictly prohibit all persons from using or being under the influence of illegal drugs or intoxicating liquors upon or about the work site(s).

ARTICLE XXVI - EXAMINATION OF WORK AND TESTING

The representatives of the Engineer, the Owner, testing agencies and governmental agencies with jurisdictional interests will have access to the work at all reasonable times for their observation, inspection and testing. The Contractor shall provide proper and safe conditions for such access.

No work shall be covered without the advance authorization of the Engineer. The Contractor shall give the Engineer timely notice of the Contractor's intention to cover the work and the Engineer shall act with reasonable promptness in response to such notice. If work is covered without the Engineer's advance authorization, it must, if requested by the Engineer, be uncovered for the Engineer's observation and replaced at the Contractor's expense.

If the Engineer considers it necessary or advisable that work which had been covered with the authorization of the Engineer be observed, inspected or tested, Contractor, at the Engineer's request, shall uncover, expose or otherwise make available for such observation, inspection or testing, that portion of the work in question, furnishing all necessary labor, material and equipment. If it is found that such work is defective, Contractor shall bear all direct, indirect and consequential costs of such uncovering, exposure, observation, inspection and testing and of satisfactory reconstruction, (including but not limited to fees and charges of engineers, architects, attorneys and other professionals), and Owner shall be entitled to an appropriate decrease in the Contract Price for such costs. If, however, such work is found not to be defective, Contractor shall be allowed an increase in the Contract Price for those costs directly attributable to such uncovering, exposure, observation, inspection, testing and reconstruction.

ARTICLE XXVII - DEFECTIVE WORK

Observation of the work by the Owner and/or Engineer shall not relieve the Contractor of any of his obligations to fulfill the Contract as herein described, and defective work shall be made good, and unsuitable materials may be rejected, notwithstanding that such defective or unsuitable work or materials may previously have been overlooked by the Owner and/or Engineer and accepted or approved for payment. If the work or any part thereof shall be found defective at any time before the final acceptance of the whole of the work, the Contractor shall forthwith make good such defect in a manner satisfactory to the Owner upon the advice of the Engineer, and if any material for use in the work, or selected therefore, shall be condemned by the Engineer as unsuitable or not in conformity with the Contract

Documents, the Contractor shall forthwith move such material from the vicinity of the work. If the Contractor shall fail to remove or replace any defective or unsuitable materials or work within a reasonable time after written notice to the Contractor, the Owner may, without prejudice to any other remedy it may have, correct such deficiencies, and the expense thereof shall be borne by the Contractor.

ARTICLE XXVIII - PROTECTION OF WORK

The Contractor shall take all precautions to prevent damage to the work, including, without limitation, damage caused by surface or ground waters. In case of damage to the work of any kind whatsoever, the Contractor shall, at its own cost, make such repairs or replacements or rebuild such parts of the work, in order that the finished work may be completed as required by the Contract Documents.

ARTICLE XXIX - MISTAKES OF CONTRACTOR

The Contractor shall pay to the Owner all expenses, losses and damages caused by or relating to any defect, omission or mistake of the Contractor or of his materialmen, suppliers or subcontractors (of any tier), or their agents, or employees, or caused by or relating to the making good of such defect, omission or mistake.

ARTICLE XXX - TITLE TO WORK, MATERIALS AND EQUIPMENT

The Contractor warrants and guarantees that title to all work, materials, and equipment covered by an Application for Payment, whether incorporated in the project or not, will pass to the Owner upon receipt of such payment by the Contractor, free and clear of all liens, claims, security interests or encumbrances.
The Contractor shall furnish releases of all liens, claims, security interests and encumbrances at the time the Contractor submits an Application for Payment for the work, materials and equipment.

ARTICLE XXXI - CHANGES

The Owner may, at any time, by written order, and without notice to the sureties, make changes in the work within the general scope of the Contract Documents, consisting of additions, deletions or other revisions. Such changes may include, without limitation, changes in the Contract Documents, Contract Drawings and Specifications, changes in the quantities, estimated quantities, design, line, grade, plan, form, dimensions or materials of the work or any part thereof, changes in the method or manner of performing the work, and changes in Owner-furnished property.

Any other written or oral orders (including, without limitation, directions, instructions, interpretations, or determinations) from the Owner or Engineer to the Contractor that cause material change in the requirements of the Contract Documents, may be authorized as

changes under this Clause; provided, as conditions precedent, that the Contractor gives the Owner and Engineer advance written notice at the earliest practicable time (in any case before beginning the work which will be the subject of the claimed change and before incurring any costs in connection with the claimed change) of the date, circumstances and source of the alleged change; provided that the Contractor expressly states in the notice that the Contractor regards the order as a change in the requirements of the Contract Documents and cites this Article of the Contract; and provided that the Owner determines that the claim of the Contractor is meritorious and issues a duly authorized written change order to that effect.

If any such change causes an increase or decrease in the cost of or time required for the performance of any part of the work under this Contract, the Owner shall make an adjustment in the Contract Price, the required completion times for the Contract work, or both. If any change decreases the work to be performed, the Contractor shall not be entitled to damages or anticipated profits on the work that is eliminated.

As a condition precedent to the Contractor's right to any entitlement to increased costs or an extension of time under this Clause, the Contractor must fully document its claim to an adjustment within thirty (30) days after receipt of a written change order from the Owner or within thirty (30) days after the Contractor gives notice of a constructive change. Such documentation shall, without limitation, include a written statement to the Owner and Engineer setting forth the full particulars of the Contractor's claimed entitlements and the claimed amounts, accompanied by full documentation and detailed accounting in support of all aspects of the claim. The Contractor shall update and supplement its claim and documentation as necessary at intervals not greater than thirty (30) days.

No claims for an adjustment shall be allowed if asserted after final payment under this Contract.

The following general policies shall apply to adjustments under this Article:

(a) The Contractor shall be entitled to any additional identifiable Contract Direct Costs associated with the changed work excluding Subcontractor's costs. For adjustments not in excess of $10,000 per change order (total of Contractor's direct cost, overhead and profit), the Contractor may include up to 10-percent overhead factor to its additional identifiable direct job costs, but excluding the cost of any subcontracting, plus up to a 10-percent profit factor to its identifiable direct costs plus overhead amount.

(b) These overhead and profit factors may be accepted by the Owner as reasonable in lieu of requiring the submission of additional supporting data. However, the Owner reserves the right to review any cost or profit element on a case-by-case basis.

(c) Adjustments relating to changes in subcontracted work may be similarly handled and the Contractor may add up to 10 percent to the total cost

(including overhead and profit factors) incurred by the subcontractor. In such cases, the same reservation of rights shall apply.

(d) For adjustments in the amount of $10,000 to $100,000, the above factors may be included initially for adjustments but will be subject to negotiation, cost and pricing data, and Owner review requirements.

In order to be allowable in adjustments, costs must be reasonable in nature and amount. Indirect Costs (overhead costs) must be allocable to the Contract, i.e., chargeable to the Contract on the basis of relative benefit received or other relationship. Direct Costs for changed work shall be limited to increases or decreases in the identifiable direct cost of the following:

(a) Direct Labor costs, including the time of a foreman while engaged directly upon changed work.

(b) Direct Labor employee insurance, social security and other direct costs assessed on Direct Labor payrolls by properly authorized public agencies.

(c) Direct costs of equipment, materials and supplies installed in the work. The direct cost of these items shall be the actual costs paid by Contractor to the suppliers of these items, without markup.

(d) Direct costs of job equipment associated with the changed work. The compensable cost for construction equipment shall be based upon the most current costs established in the "Rental Rate Blue Book for Construction Equipment" (published by Equipment Guide-Book Company) for each piece of equipment having a value in excess of $50.00. Equipment and tools of lesser value are considered "small tools" and, as such, are considered to be part of overhead. Costs shall be based on an hourly rate determined by dividing the monthly rate listed in the cited "Blue Book" by 176. Overhead and profit factors shall only be applied to the rates charged for rental equipment. No overhead or profit will be allowed for Contractor-owned equipment.

Should the Owner and Contractor fail to agree upon any adjustment addressed by this Article, the Engineer shall initially fix the terms of the adjustment and if the Owner or Contractor shall be dissatisfied with the Engineer's actions in this regard, such party may give notice to the Engineer of a dispute and a request for a formal decision under the Clause of this Contract entitled, "Responsibility of the Engineer". However nothing shall excuse the Contractor from proceeding with the Contract as changed.

The change orders executed for this Contract shall, in no event, cause the originally awarded Contract Price to exceed limitations set forth in N.J.A.C. 5:34-4.1 et. seq., except as may be authorized under such regulation.

ARTICLE XXXII - CHANGES NOT TO AFFECT BOND

No modifications, omissions or additions to the terms of the Contract Documents shall in any way affect the obligations of the sureties on the Contractor's bonds.

ARTICLE XXXIII - DISCONTINUANCE OF WORK

If the work to be done under this Contract shall be abandoned, or if this Contract or any part thereof shall be sublet without the previous written consent of the Owner, or if the Contract or any claim thereunder shall be assigned by the Contractor otherwise than as herein specified, or if at any time the Engineer or Owner shall be of the opinion, and shall so certify in writing, that the conditions herein specified as to the rate of progress are not fulfilled, or that the work or any part thereof is unnecessarily or unreasonably delayed, or that the Contractor has violated any of the provisions of this Contract, the Owner may notify the Contractor by seven (7) days advance written notice with a copy mailed to the Contractor's sureties to discontinue all work, or any part thereof; and thereupon the Contractor shall discontinue such work or such part thereof as the Owner may designate, and the Owner may thereupon, by contract or otherwise as it may determine, complete the work, or such part thereof, and charge the reasonable expense of so completing the work or part thereof to the Contractor; and for such completion the Owner for itself or its contractors may take possession of and use or cause to be used in the completion of the work or part thereof, any of such materials, equipment, machinery, implements, and tools of every description as may be found at the location of said work.

All expenses charged under this Article shall be deducted and paid by the Owner out of any monies then due or to become due the Contractor under this Contract, or any part thereof; and in such accounting the Owner shall not be held to obtain the lowest reasonable figures for the work of completing the contract or any part thereof, or for insuring its proper completion, but all sums actually and reasonably paid therefore shall be charged to the Contractor. In case the expenses so charged exceed the sum which would have been payable under this contract if the same had been completed by the Contractor, the Contractor shall pay the amount of the excess to the Owner.

ARTICLE XXXIV - MONEY MAY BE RETAINED

The Owner may keep any monies which would otherwise be payable at any time hereunder, and apply the same or so much as may be necessary therefor, to the payment of any expenses, losses or damages, incurred by the Owner, and may retain until all claims are settled, so much of such money as the Owner shall be of the opinion shall reasonably be required to settle all claims filed with the Owner, its officers and agents, relating to this Contract.

ARTICLE XXXV - APPLICATIONS FOR PAYMENT

Except as hereinafter provided, the Contractor shall submit monthly a written Application for Payment for the approval of the Engineer on forms furnished by the Engineer for the value of the work done to the date of the Application for Payment and the amount earned by the Contractor under the terms of the Contract Documents.

The Owner shall withhold 2% of the amount due on each Application for Payment for Contracts pursuant to N.J.S.A. 40A:11-16.3 unless the Contractor makes the deposits referred to in N.J.S.A. 40A:11-16.1. Such withholding shall be in addition to any retainage otherwise authorized by law or the Contract Documents.

The Owner shall make payments to the Contractor once each month as the work progresses. Payment may be withheld at any time if the work is not proceeding in accordance with the Contract Documents.

At least twenty (20) days before each monthly progress payment falls due for approval by the Owner (but not more often than once per month), the Contractor will submit to the Engineer an Application for Payment filled out and signed by the Contractor covering the work performed during the period covered by the Application for Payment and supported by such data as the Engineer may reasonably require.

Accompanying each Application for Payment shall be releases of any and all lien claims which may have been filed by persons claiming to have performed any labor or furnished any materials toward performance or completion of this Contract.

All invoices for payment shall be accompanied by the calculation of any applicable price adjustment (asphalt/fuel) as defined in the Information for Bidders 0.34 – Allowances. Calculations shall include the current price index, and the basic price index established at the time of bid.

Where any specific item(s) in the Application for Payment is questioned, the Engineer may delete those items from the Application for Payment and approve the acceptable portion of the Application for Payment.

For unit price work the quantities set forth in the Contract Documents are estimated quantities. Such quantities are not guaranteed but are solely for the purpose of comparing Bids and determining the initial Contract Price. Determinations of the actual quantities for unit price work will be made by the Engineer, whose decisions (by recommendation of an Application for Payment or otherwise) will be final and binding unless a formal decision is requested within the time provided in the Article of this Contract entitled, "Responsibility of the Engineer" in the Subarticle entitled, "Engineer's Decisions".

Prior to performing unit price work which would cause a net increase in the Contract Price by reason of the estimated quantity(ies) for such unit price work being exceeded, the Contractor shall request that the Owner issue a change order under the Article of the Contract entitled, "Changes" to cover such increase. No increase in the Contract Price will be authorized without advance approval by change order.

Payment requested for stored materials and/or equipment shall, in addition to the conditions set forth in N.J.S.A. 40A:11-16.4, be subject to the following conditions:

(a) The materials and/or equipment shall be received in a condition satisfactory for incorporation in the work.

(b) The materials and/or equipment shall be stored on Owner's Property or at an approved secure location in such manner that they will not be damaged due to weather, construction operations or any other cause.

(c) An invoice from the supplier shall be furnished for each item which payment is requested.

(d) The Contractor shall furnish written proof from the supplier of payment for at least 90% of the cost of the materials and/or equipment, no later than thirty (30) days after Contractor's receipt of the payment for such materials and/or equipment from the Owner. The Owner shall have the right to deduct from the next Application for Payment an amount equal to the cost of the said materials and/or equipment if adequate and timely proof of payment is not submitted by the Contractor.

(e) Title to the stored materials and/or equipment shall pass to the Owner immediately upon the Owner's issuance of payment for the same. All stored materials and/or equipment for which the Owner has title shall be prominently labelled by the Contractor to indicate that title is in the Owner.

(f) Risk of loss for the stored materials and/or equipment shall remain in the Contractor until the materials and/or equipment shall be incorporated into the works and finally accepted by the Owner. The Contractor shall maintain (and provide evidence of) adequate insurance to cover the risk of loss of the stored materials and/or equipment.

(g) All stored materials and/or equipment shall be, at all reasonable times, subject to the inspection of the Engineer and the Owner. The Contractor shall bear the cost of Engineer's time and expense incurred in travelling to the Contractor's storage site(s).

The Engineer will, within 20 days after receipt of each Application for Payment, either indicate in writing its approval of payment and present the Application for Payment to the Owner, or return the Application for Payment to the Contractor indicating in writing its reasons for refusing to approve payment. In the latter case, the Contractor may make the necessary corrections and resubmit the Application for Payment. The Owner shall review the Application for Payment at its next regularly scheduled meeting (provided that the Owner has received the Application for Payment in accordance with the Owner's standard payment procedure). Any Application for Payment shall be subject to correction in any

subsequent Application for Payment. Upon presentation of invoice by the Contractor, Owner shall make payment in 30 days according to N.J.S.A. 2A:30A-2.

ARTICLE XXXVI - FINAL ESTIMATE AND PAYMENT

The Contractor shall, as soon as practical after the final completion of this Contract, submit to the Engineer, in writing, for his approval, a final Application for Payment.

All prior Applications for Payment shall be subject to correction in the final Application for Payment.

The Owner shall pay to the Contractor within 30 days of final completion and acceptance by the Owner, as provided by law, the entire balance of the Contract Price due hereunder, including the amount withheld pursuant to N.J.S.A. 40A:11-16.3, after deducting there from all previous payments and all amounts to be deducted and all amounts to be retained under the provisions of this Contract and as permitted by law. Such final payment shall not be made before the expiration of the time within which claims for labor performed and materials furnished under the Contract must be filed under the "Municipal Mechanics Lien Law" (N.J.S.A. 2A:44-125, et seq.) (Contract completion or acceptance by the Owner and payment to the Contractor within 60 days thereof).

The Owner, with the advice of the Engineer, shall fix the date of final completion of the work and shall annotate the date upon the final Application for Payment.

ARTICLE XXXVII - LIENS

If at any time before final payment any person or persons claiming to have performed any labor or furnished any materials, toward the performance or completion of this Contract, shall file proper notice of claim, the Owner shall retain, until the discharge thereof from the monies under its control, so much of such monies as shall be sufficient to satisfy and discharge the amount claimed to be due in such notice, together with the estimated cost of any action or actions to be incurred by the Owner in connection with the filing of such notice.

After such retainage, the balance of money which may be due to the Contractor shall not be paid by the Owner until the Contractor has delivered to the Owner an Affidavit to be signed personally by the Contractor, or by a General Partner if Contractor is a Partnership, or by the President or Secretary if Contractor is a Corporation, attesting to the payment of all others who supplied labor, materials or equipment for the Contract and for which a lien claim could be filed, with receipts in full to cover the potential claims of such other suppliers of labor, materials or equipment, such receipts to be attached to such Affidavit.

ARTICLE XXXVIII - WAIVERS

Neither the observation by the Owner or the Engineer nor any of their agents, nor any order, measurement, or certification by the Engineer, nor any order by the Owner for the payment

of money nor payment for, nor acceptance of, the whole or any part of the work by the Owner, nor any extension of time, nor any possession taken by the Owner or its employees, shall operate as a waiver of any provision of this Contract, or of any power herein reserved to the Owner, or any right to damages herein provided, nor shall any waiver of any breach of this Contract be held to be a waiver of any other or subsequent breach. Any remedy provided in this Contract shall be taken and construed as cumulative, that is, in addition to each and every other remedy herein provided, and, in addition to all other suits, actions, or legal proceedings, the Owner shall also be entitled as of right to a writ of injunction as a relief against any breach of any of the provisions of this Contract.

ARTICLE XXXIX - LIABILITY OF OWNER

No person, firm or corporation, other than the Owner, the Engineer and the Contractor, now has any interest hereunder, and no claim by any other person to be a beneficiary of this Contract shall be made or be valid, and neither the Owner nor any agent of the Owner, shall be liable for, or be held to pay, any money, except as herein provided. The acceptance by the Contractor of the final payment shall operate as and shall be a release to the Owner, the Engineer and every agent of the Owner and Engineer, for all claims by and liabilities to the Contractor for anything done or furnished for, or relating to the work, or for any act or neglect of the Owner or the Engineer or of any person relating to or affecting the work except the claim against the Owner for the remainder, if any there be, of the amounts deducted or retained as herein provided.

ARTICLE XL - WARRANTY

The Contractor warrants to the Owner and Engineer that the materials and equipment furnished by the Contractor or any Subcontractor (of any tier) under the Contract Documents will be fit for the intended purpose, of good quality and new unless otherwise required or permitted by the Contract Documents, that the work will be free from defects not inherent in the quality required or permitted, and that the work will conform with the requirements of the Contract Documents. Work not conforming to these requirements, including substitutions not properly approved and authorized, shall be considered defective. This warranty excludes remedy for damage or defect caused by others for whom the Contractor is not responsible, modifications not executed by the Contractor or its Subcontractors (of any tier), improper operation, or normal wear and tear under normal usage. In case of inquiry by the Engineer, the Contractor shall furnish evidence, satisfactory to the Engineer, as to the nature and quality of any work, materials or equipment furnished under the Contract. The foregoing warranty shall remain in effect until the end of the Maintenance Period described in the Article of this Contract entitled "Maintenance Period" and the Owner shall have the remedies provided therein.

The Contractor will provide the Owner with all available manufacturer's warranties and the documentation therefore, covering the materials, equipment and goods supplied under the Contract. Such manufacturer's warranties shall survive the completion and acceptance of the Contract, and shall remain in effect according to their terms.

ARTICLE XLI - MAINTENANCE PERIOD

In addition to, and not in lieu of the Contractor's warranty, above, if, within one year from the date of Owner's final acceptance of the Contractor's work or such longer period of time as may be prescribed by law or regulation or by the terms of any special warranty required by the Contract Documents, any such work is found to be defective or requires repair, amendment, reconstruction, or rectification to keep the facility and its appurtenances in good and serviceable condition, the Contractor shall promptly, without cost to the Owner and in accordance with Owner's written instructions, either correct such condition or, if the work has been rejected by the Owner, remove it from the site and replace it with proper work. Such one-year period is referred to here as the "Maintenance Period."

The Contractor's maintenance obligation excludes remedy for damage or defect caused by others for whom the Contractor is not responsible, or caused by Owner's improper use or operation, or caused by the failure of the Owner to provide necessary lubricants.

Throughout the Maintenance Period, the Contractor shall also correct any settlement or erosion in fills or cuts and restore all ground areas to elevations indicated on the Contract Drawings when so instructed by the Owner or the Engineer.

The Contractor's Maintenance Bond shall remain in effect until the end of the Maintenance Period. The Maintenance Bond shall be in a sum equal to 100% of the Contract Price, less the amount of the Environmental Maintenance Bond, and furnished as specified in Section 0.17, "Security for Faithful Performance and Maintenance (Bonds)," of the Information for Bidders.

If the Contractor does not comply with the requirements of the above stated warranty obligations or maintenance obligations, promptly correct the work, promptly comply with the terms of instructions of the Owner or Engineer, or, in an emergency where delay would cause material risk of loss or damage, the Owner may have the work corrected or the rejected work removed and replaced and all direct, indirect and consequential costs of such removal and replacement (including but not limited to fees and charges of engineers, architects, attorneys and other professionals) will be borne by Contractor and may be deducted from amounts payable to the Contractor under the Contract. If instead of requiring correction or removal and replacement of the work, the Owner prefers to accept it, the Owner may do so and the Owner shall be entitled to an appropriate decrease in Contract Price.

ARTICLE XLII - LEGAL ADDRESS OF CONTRACTOR

The address given in the bid or proposal submitted by the Contractor and the Contractor's office at or near the site of the work are hereby designated as places to either of which notices, letters, and other communications to the Contractor may be certified, mailed or delivered. The delivery at the site office, or delivery to the address given in the bid or proposal or depositing in a postpaid wrapper directed to the address given in the bid or proposal, in any post office box regularly maintained by the U.S. Postal Service of any notice, letter or other communication to the Contractor, shall be deemed sufficient service

thereof upon the Contractor, and the date of said service shall be the date of such delivery or mailing. The Contractor's address may be changed at any time by an instrument in writing, executed and acknowledged by the Contractor and delivered to the Owner with a copy to the Engineer. Nothing herein contained shall be deemed to preclude or render inoperative the personal service of any notice, letter or other communication upon a Contractor's representative.

ARTICLE XLIII - RIGHT OF THE OWNER TO TERMINATE CONTRACT OR GIVE A THREE (3) DAY DEFICIENCY NOTICE

In the event of any material delay or default in the performance of any of the provisions of the Contract Documents by the Contractor, or by any of his Subcontractors (of any tier), the Owner may serve written notice upon the Contractor and the surety(ies) of its intention to terminate the Contract, such notice to contain the reasons for the Owner's intention to terminate the Contract, and unless within ten (10) days after the serving of such notice upon the Contractor, such delay or default shall cease or arrangements for the correction and cure of the delay or default satisfactory to the Owner shall be made, the Owner may, upon the expiration of said ten (10) days, terminate the Contract. In the event of any such termination, the Owner shall immediately serve notice thereof upon the Contractor and the surety(ies), and the surety(ies) shall have the right to take over and perform the Contract; provided, however, that if the surety(ies) do not commence performance of the Contract within ten (10) days from the date of the mailing to such surety(ies) of the notice of termination and correct and cure such delay or default or make arrangements for the correction and cure of the delay or default satisfactory to the Owner, the Owner may take over the work and prosecute the same to completion by contract or by force account for the account of and at the expense of the Contractor and may deduct the cost thereof from the payment then or thereafter due to the Contractor, and the Contractor and the surety(ies) shall be liable to the Owner for any excess cost caused to the Owner thereby, and in such event the Owner may take possession of and utilize in completing the work, such of the Contractor's materials, equipment appliances, and plant as may be on the site of the work and necessary or convenient therefor.

In addition to and not in lieu of the termination remedy provided above or any other remedy the Owner may have, if the Contractor or Subcontractor (of any tier) should fail or neglect at any time to prosecute the work properly or fail to perform any provision of the Contract Documents, the Owner may give a three (3) day written deficiency notice. The Owner, after three (3) days from the service of the three (3) day deficiency notice to the Contractor, may make good such deficiencies for the account of and at the expense of the Contractor and may deduct the cost thereof from the payment then or thereafter due to the Contractor and the Contractor and the surety(ies) shall be liable to the Owner for any excess cost caused to the Owner thereby.

In addition to and not in lieu of the termination remedies provided above, the Owner may terminate this Contract, in whole or in part, for the convenience of the Owner, if the Owner determines that such termination is in the Owner's interest. Such termination shall be by written notice to the Contractor specifying the extent of termination and the effective date.

In case of such termination for convenience, the Contractor shall be paid for the work satisfactorily completed to the date of termination, together with the reasonable costs of settlement of the work terminated, but not for lost or anticipated profits on the work terminated.

ARTICLE XLIV - USE AND OCCUPANCY PRIOR TO ACCEPTANCE BY OWNER

The Owner shall have the right to the possession, use and occupancy of any portion or unit of the project upon Substantial Completion as defined in this Agreement.
The possession, use or occupancy of any part or parts of the project by the Owner on Substantial Completion shall not operate to relieve the Contractor from its responsibility to complete all of the work as specified in the Contract Documents. The possession, use or occupancy by the Owner of any part of the project, on Substantial Completion or otherwise, shall not constitute or necessarily imply final completion or acceptance of that part of the project or work by the Owner or Engineer.

The statutes of limitation and repose shall commence to run on the date of Substantial Completion certified by the Engineer.

ARTICLE XLV - PAYMENT FOR UNCORRECTED WORK

Should the Owner direct the Contractor not to correct work that has been damaged or that has not been performed in accordance with the Contract Documents, a deduction from the amount payable under the Contract, as determined by the Engineer, shall be made to compensate the Owner for the uncorrected work.

ARTICLE XLVI - ORAL AGREEMENTS

No oral order, objection, claim or notice by any party to the other shall affect or modify any of the terms or obligations contained in any of the Contract Documents, and none of the provisions of the Contract Documents shall be held to be waived or modified by reason of any act whatsoever, other than by an express waiver or modification to the Contract Documents, in writing, and no evidence shall be introduced in any proceeding of any other alleged waiver or modification.

ARTICLE XLVII - CONTRACTOR BOOKS AND RECORDS

The Contractor shall maintain its books and records in accordance with generally-accepted accounting principles and auditing standards throughout the performance of this Contract and for three (3) years after final completion and acceptance.

ARTICLE XLVIII - DISPUTES

Disputes arising under this Agreement shall be submitted to a process of resolution pursuant to alternative dispute resolution practices, such as mediation, binding arbitration or non-

binding arbitration, as required by P.L. 1997, c. 371, pursuant to industry standards, prior to being submitted to a court for adjudication. The specific type of alternate dispute resolution to be utilized shall be selected by the Owner and the costs payable to the mediator or arbitrator(s) shall be borne equally by the Owner and Contractor.

Nothing in this Article shall prevent the Owner from seeking injunctive or declaratory relief in court at any time.

The alternative dispute resolution practices required by this Article shall not apply to disputes concerning the bid solicitation or award process, or to the formation of contracts or subcontracts to be entered into pursuant to P.L. 1971, c. 198 (N.J.S.A. 40A:11-1, et seq. The joinder of parties to any dispute hereunder shall be governed by the provisions of P.L. 1997, c.371.

Pursuant to the provisions of P.L. 1997, c. 371, the OWNER and the Contractor hereby agree with, represents and warrants to the ENGINEER that the ENGINEER shall not be made a party to any alternate dispute resolution process relating to the Construction Contract or its breach, other than non-binding mediation, the costs of which shall be borne by either the Owner or Contractor or both the Owner and the Contractor, as the case may be, but in no event by the Engineer.

Should the Contractor make any claim or claims against the OWNER or ENGINEER, or their agents and employees, based, in whole or in part, upon any alleged ENGINEER error or omission in connection with the project; the Contractor shall be responsible for the payment of ENGINEER'S costs of defense against such claims (including but not limited to reasonable attorney's fees), unless the ENGINEER is proved, in a court of competent jurisdiction, to have been guilty of negligence or willful misconduct which is determined to be the sole proximate cause of such claim or claims.

IN WITNESS WHEREOF, the parties to these presents have hereunto set their names and affixed their seals:

EAST WINDSOR MUNICIPAL
UTILITIES AUTHORITY

By: _____

(Seal)

_____
Title

Attest:

_____

_____
Title

Contractor

By:_____

_____(Seal)
Title

Attest:

_____

_____
Title

PERFORMANCE LABOR AND MATERIAL PAYMENT BOND

KNOW all men by these presents, that we, the undersigned, _____, as principal and _____, as sureties, are hereby held and firmly bound unto the East Windsor Municipal Utilities Authority in the penal sum _____ _____ dollars, for the payment of which well and truly to be made, we hereby jointly and severally bind ourselves, our heirs, executors, administrators, successors and assigns.

Signed this___day of _____, 20___.

The condition of the above obligation is such that whereas, the above named principal did on the_____day of_____, 20___, enter into a contract with the East Windsor Municipal Utilities Authority (the "Contract"), which said Contract is made a part of this bond the same as though set forth herein;

Now, if the said_____ shall well and faithfully do and perform the things agreed by_____ to be done and performed according to the terms of said Contract, and shall pay all lawful claims of beneficiaries as defined by N.J.S. 2A:44-143 for labor performed or materials, provisions, provender or other supplies or teams, fuels, oils, implements or machinery furnished, used or consumed in the carrying forward, performing or completing of said contract, we agreeing and assenting that this undertaking shall be for the benefit of any beneficiary as defined in N.J.S.2A:44-143 having a just claim, as well as for the obligee herein; then this obligation shall be void; otherwise the same shall remain in full force and effect; it being expressly understood and agreed that the liability of the surety for any and all claims hereunder shall in no event exceed the penal amount of this obligation as herein stated.

The said surety hereby stipulates and agrees that no modifications, omissions or additions in or to the terms of the said Contract or in or to the plans or specifications therefore shall in any wise affect the obligation of said surety on its bond.

Recovery of any claimant under the bond shall be subject to the conditions and provisions of N.J.S. 2A:44-143 to the same extent as if such conditions and provisions were fully incorporated in the form set forth above.

IN WITNESS WHEREOF said principal and surety have hereunto set their respective hands and seals or caused these presents to be signed and sealed by their proper representatives on the day and date set forth above.

_____

Principal

WITNESS/ATTEST

_____ By _____

_____

Surety

ATTEST

_____ By _____

NOTE: If the principal (Contractor) is a partnership, the bond should be signed by each of the general partners.

If the principal (Contractor) is a corporation, the bond must be signed by and attested by duly authorized representatives and an enabling corporate resolution must be attached.

There are to be executed an appropriate number of counterparts of this Performance Bond corresponding to the number of counterparts of the Contract.

IMPORTANT: Surety companies executing BONDS must appear on the Treasury Department's most current list (Circular 570 as amended) and be authorized to transact business in the State where the PROJECT is located.

SURETY DISCLOSURE STATEMENT AND CERTIFICATION

_____, surety(ies) on the attached bond, hereby certifies(y) the following:

(1) The surety meets the applicable capital and surplus requirements of R.S. 17:17-6 or R.S. 17:17-7 as of the surety's most current annual filing with the New Jersey Department of Insurance.

(2) The capital (where applicable) and surplus, as determined in accordance with the applicable laws of this State, of the surety(ies) participating in the issuance of the attached bond is (are) in the following amount(s) as of the calendar year ended December 31,_____ (most recent calendar year for which capital and surplus amounts are available), which amounts have been certified as indicated by certified public accountants (indicating separately for each surety that surety's capital and surplus amounts, together with the name and address of the firm of certified public accounts that shall have certified those amounts):

_____

_____

_____

_____

(3)(a) With respect to each surety participating in the issuance of the attached bond that has received from the United States Secretary of the Treasury a certificate of authority pursuant to 31 U.S.C. sec. 9305, the underwriting limitation established therein and the date as of which that limitation was effective is as follows (indicating for each such surety that surety's underwriting limitation and the effective date thereof):

_____

_____

_____

_____

(b) With respect to each surety participating in the issuance of the attached bond that has not received such a certificate of authority from the United States Secretary of the Treasury, the underwriting limitation of that surety as established pursuant to R.S. 17:18-9 as of (date on which such limitation was so established) is as follows (indicating for each such surety that surety's underwriting limitation and the date on which that limitation was established):

_____

_____

_____

_____

_____

(4) The amount of the bond to which this statement and certification is attached is

$_____

(5) If, by the virtue of one or more contracts of reinsurance, the amount of the bond indicated under item (4) above exceeds the total underwriting limitation of all sureties on the bond as set forth in items (3)(a) or (3)(b) above, or both, then for each such contract of reinsurance:

(a) The name and address of each such reinsurer under that contract and the amount of that reinsurer's participation in the contract is as follows:

_____

_____

_____

_____

_____

_____

and, (b) Each surety that is party to any such contract of reinsurance certifies that each reinsurer listed under item (5)(a) satisfies the credit for reinsurance requirement established under P.L. 1993, c.243 (c.17:51B-1 et seq.) and any applicable regulations in effect as of the date on which the bond to which this statement and certification is attached shall have been filed with the appropriate public agency.

CERTIFICATE

(to be completed by an authorized certifying agent for each surety on the bond)

I_____, as _____
(Name of Agent) (Title of Agent)

for _____,
(Name of Surety)

a corporation/mutual insurance company/other domiciled in_____,
(indicating type of business organization) (circle one) (State of Domicile)

DO HEREBY CERTIFY that, to the best of my knowledge, the foregoing statements made by me are true and ACKNOWLEDGE that if any of those statements are false, this bond is VOID.

_____
(Signature of Certifying Agent)

_____
(Printed Name of Certifying Agent)

_____
(Title of Certifying Agent)

MAINTENANCE BOND

KNOW all men by these presents, that we, the undersigned, _____as principal, and _____, as sureties, are hereby held and firmly bound unto the East Windsor Municipal Utilities Authority in the penal sum of _____ _____ dollars, for the payment of which well and truly to be made, we hereby jointly and severally bind ourselves, our heirs, executors, administrators, successors and assigns.

Signed this _____day of _____, 20___.

The condition of the above obligation is such that whereas, the above-named principal did on the _____ day of _____, 20___, enter into a contract with the East Windsor Municipal Utilities Authority (the "Contract"), which said Contract is made a part of this bond the same as though set forth herein;

Now, if the said _____shall well and faithfully do and perform all things agreed by _____to be done and performed according to the Articles of the Contract entitled, "Warranty" and "Maintenance Period"; then this obligation shall be void; otherwise the same shall remain in full force and effect; it being expressly understood and agreed that the liability of the surety for any and all claims hereunder shall in no event exceed the penal amount of this obligation as herein stated.

This Maintenance Bond is to remain in effect until the end of the Maintenance Period provided under the Contract.

The said surety hereby stipulates and agrees that no modifications, omissions or additions in or to the terms of the said Contract or in or to the plans or specifications therefore shall in anyway affect the obligation of said surety on its bond.

IN WITNESS WHEREOF said principal and surety have hereunto set their respective hands and seals or caused these presents to be signed and sealed by their proper representatives on the day and date set forth above.

	_____
WITNESS/ATTEST	Principal
_____	By _____
	_____
ATTEST	Surety
_____	By _____

NOTE: If the principal (Contractor) is a partnership, the bond should be signed by each of the general partners.

If the principal (Contractor) is a corporation, the bond must be signed by and attested by duly-authorized representatives and an enabling corporate resolution must be attached.

There are to be executed an appropriate number of counterparts of this Maintenance Bond corresponding to the number of counterparts of the Contract.

IMPORTANT: Surety companies executing BONDS must appear on the Treasury Department's most current list (Circular 570 as amended) and be authorized to transact business in the State where the PROJECT is located.

ENVIRONMENTAL MAINTENANCE BOND

KNOW ALL MEN BY THESE PRESENTS: that _____

_____
(Name of Contractor) (Address of Contractor)

_____ a _____
Corporation, Partnership or Individual

hereinafter called Principal, and_____
(Name of Surety)

_____
hereinafter called Surety, are held and firmly bound unto

_____
(Name of Owner)

_____
(Address of Owner)

hereinafter called OWNER, in the penal sum of _____

dollars $_____, in lawful money of the United States, for the payment of which sum will and truly to be made, we bind ourselves, successors, and assigns jointly and severally, firmly by these presents.

THE CONDITION OF THIS OBLIGATION is such that whereas, the Principal entered into a certain contract with the OWNER, dated the _____day of _____20_____, a copy of which is hereto attached and made a part hereof for the construction of:

East Windsor Municipal Utilities Authority
Mercer County, New Jersey
Huntington Drive Water Main Replacement
State Loan Project No. XXXXXXXX-XX
Contract No. 2018-01

NOW, THEREFORE, if the Principal shall well, truly and faithfully perform its duties, all the undertakings, covenants, terms, conditions, and agreements of said contract during the original term thereof, and any extensions thereof which may be granted by the OWNER, with or without notice of the Surety and during the one year guaranty period, and during the one year following the guaranty period, and if he shall satisfy all claims and demands incurred under such contract with respect to Environmental sections of the Specifications and shall fully indemnify and save harmless the OWNER from all costs and damages which it may suffer by reason of failure to do so, and shall reimburse and repay the OWNER all outlay and expense which the OWNER may incur in making good any default; then this obligation shall be void; otherwise to remain in full force and effect.

PROVIDED, FURTHER, that the said Surety for value received hereby stipulates and agrees that no change, extension of time, alteration or addition to the terms of the contract or to the WORK to be performed thereunder or the SPECIFICATIONS accompanying the same shall in any way affect its obligation on this BOND, and it does hereby waive notice of any such change, extension of time, alteration or addition to the terms of the contract or to the WORK or to the SPECIFICATIONS.

PROVIDED, FURTHER, that no final settlement between the OWNER and the CONTRACTOR shall abridge the right of any beneficiary hereunder, whose claim may be unsatisfied.

IN WITNESS WHEREOF, this instrument is executed in _____counterparts,
(number)

each one of which shall be deemed an original, this the _____day of _____, 20_____.

ATTEST:

_____
(Principal)

_____
(Principal) Secretary

(SEAL) BY:_____

_____
(Address)

_____

_____
Witness as to Principal

_____
(Address)

_____

_____
(Surety)

ATTEST: By:_____

Attorney-In-Fact

_____ _____
Witness as to Surety (Address)

_____ _____
(Address)

_____

NOTE: Date of BOND must not be prior to date of Contract. If CONTRACTOR is all partners should execute BOND.

The Environmental Maintenance Bond shall be supplied in the amount of $25,000 or 50% of the bid price for the materials needed to fulfill the environmental specifications, whichever is greater, when the contract documents are finalized.

IMPORTANT: Surety companies executing BONDS must appear on the Treasury Department's most current list (Circular 570 as amended) and be authorized to transact business in the State where the PROJECT is located.

NOTICE OF AWARD

TO: _____

_____

_____

_____

Project Description: _____

_____

_____

The OWNER has considered the Proposal submitted for the above described WORK in response to its Advertisement for Bids dated _____, 20 ___ and Information for Bidders.

You are required by the Contract Documents to execute the Contract and furnish the Performance Bond, Certificates of Insurance (with copies of the policies including all endorsements), within twenty-one (21) days, Sundays and holidays excepted, from the date of this Notice of Award.

If you fail to execute the Contract and to furnish satisfactory bonds, evidences of insurance and other required documents within twenty-one (21) days, Sundays and holidays excepted, from the date of this Notice of Award, or within such further time period as you and OWNER may in writing agree, the OWNER will be entitled to consider all your rights arising out of the OWNER's acceptance of your bid as abandoned and as a forfeiture of your bid security. The OWNER will also be entitled to such other rights as may be provided by law.

You are required to return an acknowledged copy of this NOTICE OF AWARD to the OWNER.

Dated this_____day of _____, 20 ___

_____

OWNER

BY: _____

TITLE: _____

ACCEPTANCE OF NOTICE

Receipt of the above NOTICE OF AWARD is hereby acknowledged by: _____
this ___day of _____, 20 ___,

By _____ Title _____

NOTICE TO PROCEED

TO: _____ DATE: _____
_____ PROJECT: _____

_____ _____

_____ _____

_____ _____

_____ _____

You are hereby notified to commence WORK in accordance with the Contract dated _____, 20 ___, on or before _____,20____, and you are to complete all WORK within One hundred fifty (150) consecutive calendar days thereafter. The date of completion of all WORK is therefore _____,20____.

_____
OWNER

BY: _____

TITLE: _____

ACCEPTANCE OF NOTICE

Receipt of the above NOTICE TO PROCEED is hereby acknowledged

by:_____this the _____ day of _____ , 20 ___,

By: _____ Title _____

SECTION 1000
GENERAL REQUIREMENTS

PART 1: GENERAL

1.01 CONTRACT DOCUMENTS

The Contract Documents for this work are identified in the Article of the Contract entitled Definitions

The Detailed Specifications consist of three (3) Divisions as follows:

Division 1 - General Requirements
Division 2 - Site Work
Division 15 - Mechanical

1.02 WORK INCLUDED

The following information is part of this Division:

1000 - General Requirements
1010 - Additional Information
1020 - Special Project Procedures
1030 - Coordination
1040 - Field Engineering
1050 - Regulations
1060 - Alternates
1070 - Measurement and Payment
1080 - Project Meetings
1090 - Submittals
1100 - Quality Control
1110 - Construction Facilities and Temporary Utilities
1120 - Material and Equipment
1130 - Special Conditions

1.03 PROJECT DESCRIPTION

The Contractor is to furnish all labor, materials and equipment required for the project and related construction for the bid price. The work is to be coordinated by the Contractor with a Project Manager located on the construction site.

The Contractor is to provide administrative and scheduling personnel as well as provide all the labor, superintendence, materials, plant, tools and equipment necessary and required for properly performing and completing the work as described and more particularly specified within the time stipulated. He is to furnish, erect, maintain and remove the construction plant and such temporary works as may be required. These

requirements include, but are not restricted to, suitable quarters for workers where necessary, including temporary sanitary facilities, water supply, heat and light for the workers as well as for construction purposes. Existing public roads which are adjacent to the construction site may be affected by construction activities on the site. The Contractor will be required to keep these roads open at all times during the contract and maintain these roads in a safe condition which is suitable for the public use. The cost of connection to, or extension of, existing utility services from locations on the existing property is to be borne by the Contractor under this Contract. Temporary roads, guards, lights and signposts are to be included, as necessary. The Contractor is to furnish all material, equipment and labor necessary to complete his work in accordance with the terms of this Contract and the requirements thereunder, including all general and detailed Specifications hereinafter outlined.

A description of the work is included in the Scope of Contract section of the specifications. This description generally defines the work to be undertaken on this project and is to be supplemented by the remaining Contract Documents.

Backfill and resurfacing of Municipal roadways shall be as per the requirements of the East Windsor Township Road Department. Temporary pavement replacement shall occur at intervals specified on the Drawings and Specifications. Permits shall be obtained by the Contractor as set forth in the Article of the Contract entitled "Permits."

The construction schedule is to be coordinated with the Owner and the Engineer. Regularly scheduled job meetings are to occur at least twice monthly during the full contract period and thereafter as may be necessary.

1.04 OWNER FURNISHED PRODUCTS (Not Included)

PART 2: PRODUCTS

Not Used

PART 3: EXECUTION

Not Used

* * * * *

SECTION 1010 - ADDITIONAL INFORMATION

PART 1: GENERAL

1.01 INSURANCE AND TIME LIMITS

The Contractor is to refer to the appropriate sections of the Information for Bidders and the Contract ("CON") pages for insurance requirements and time limits relating to project completion.

1.02 ALLOWANCES

SEE THE SECTION OF THE INFORMATION FOR BIDDERS ENTITLED "ALLOWANCES".

1.03 PATENTS AND COPYRIGHTS

SEE THE ARTICLE OF THE CONTRACT ENTITLED "PATENTS AND COPYRIGHTS".

1.04 GUARANTEES

SEE THE ARTICLE OF THE CONTRACT ENTITLED "WARRANTY".

1.05 SECURITY MEASURES OF OWNER

SEE THE ARTICLE OF THE INFORMATION FOR BIDDERS ENTITLED "SECURITY MEASURES OF OWNER".

1.06 OTHER CONTRACTS

The Owner may have other contracts with work related to the work of the Contractor. The Contractor is to cooperate with other contractors with regard to storage of materials and execution of the work. It is the Contractor's responsibility to inspect all work by other contractors affecting his work and to report to the Owner any irregularities which will not permit him to complete his work in a satisfactory manner. His failure to notify the Owner of such irregularities indicates the work of other contractors has been satisfactorily completed to receive his work. The Contractor is not responsible for defects of which he could not have known, which develop in the work of others after the work is completed. Where work under this Contract is to be connected to work under other contracts, it is the responsibility of the Contractor to measure the completed work in place and report to the Owner immediately any difference between completed work by others and the provisions of the Contract Documents.

1.07 WITNESS TESTING

All testing of materials and equipment specified under the various sections of these Contract Documents is to be witnessed by the Engineer. Contractor will give the Engineer reasonable advance notice of such testing and will make reasonable accommodations for the Engineer to witness such testing.

PART 2: PRODUCTS

Not Used

PART 3 EXECUTION

Not Used

* * * * *

SECTION 1020

SPECIAL PROJECT PROCEDURES

PART 1: GENERAL

1.01 WORK INCLUDED

The Contractor shall furnish all labor, equipment, materials and means necessary to provide and maintain facilities required by the engineer and regulatory agencies for the project. The cost for all equipment and services provided under this section shall be included in the lump sum prices bid and no additional payments will be considered by the Owner.

PART 2: PRODUCTS

2.01 ENGINEER'S FIELD OFFICE

NOT IN CONTRACT

2.02 PHOTOGRAPHS

The Contractor is to refer to the appropriate section of the Information for Bidders for requirements on monthly progress photographs.

2.03 PROJECT SIGN

The Contractor is to provide, erect, maintain and remove an approved project sign. The sign shall be 8'-0" x 4'-0" in size. The sign is to be in accordance with NJDEP requirements and shall also bear the East Windsor Municipal Utilities Authority seal, and shall be lettered as shown herein.

The project sign is to be mounted between common redwood uprights and shall be fabricated, erected and maintained by the Contractor in accordance with the following specifications:

a) Sign Panel: The sign panel is to be constructed of 3/4" minimum thickness marine plywood rabbeted into a 2" x 4" redwood frame. All fasteners used in the construction of the sign are to be of aluminum or galvanized steel.

b) Panel Face:

Background - The sign face background is to consist of at least two coats of white paint.

Lettering - Use black paint for all lettering except as otherwise designated.

Emblem - The emblem is to be of the types and sizes provided by the regulatory agencies and placed on the sign as directed by the Engineer. Submit layout sketch to the Engineer for approval prior to fabrication.

c) Painting: All supports, trim and the backs of the sign panels are to be painted with at least two coats of the same white paint used for the sign faces. All paint is to be exterior grade paint, suitable for use on wood signs.

d) Location: The sign is to be located in a prominent position as determined by the Engineer.

e) Sign Supports: Adequate support for the project sign, as determined by the Engineer, is to be provided by the Contractor. Adequate support is to include the positioning and alignment of the sign as determined by the Engineer.

f) Maintenance: The project sign is to be maintained by the Contractor in good condition at all times for the duration of construction.

g) Removal of Sign from the Project Site: The Contractor is to remove the project sign from the construction site at the completion of construction and when ordered by the Engineer.

h) Payment: The cost of the fabrication, erection, maintenance and removal of the project sign, including all labor and materials, is to be included in the Contractor's total bid. No separate payment will be made for the project sign.

PART 3: EXECUTION

3.01 EMERGENCY TELEPHONE

The Contractor is to maintain telephones at all times after regular working hours, including weekends and holidays, where he or his representatives can be reached on an emergency basis. The Contractor or his representatives are to be prepared to act to correct conditions on the site deemed to constitute an emergency by either the Owner, his agent, the Engineer, or local authority, but he is not to wait for instructions before proceeding to properly protect both life and property. If a condition on the site requires attention after working hours, either the Owner, agent, Engineer, or local authority may call the Contractor or his representatives at the emergency telephone number, identify himself and describe the emergency condition. The Contractor is expected to dispatch men and equipment to adequately institute corrective measures within two (2) hours. If, for some reason, the Contractor or his agent cannot be reached at the emergency number

after a reasonable time (½-hour), the Owner will have the right to immediately initiate corrective measures in accordance with the Article which follows, covering Emergency Services to Correct Hazardous Conditions, and the Contractor will be considered to have waived any right to perform emergency service.

3.02 EMERGENCY SERVICES TO CORRECT HAZARDOUS CONDITIONS

In the event that the Contractor fails to maintain safe job conditions or traffic conditions, including, but not limited to, trench settlement and hazardous piling or storage of backfill or construction materials, the Owner, after failure of the Contractor to commence substantial steps at the job site to rectify the situation within two (2) hours of the time the contractor has been notified, pursuant to the preceding paragraph, of the unsafe conditions, may hire guards, take such precautions, make such repairs and take any other steps which the Owner or the Owner's agent, in its discretion, considers necessary to protect the property, persons, or the Owner. The cost of any of these precautions, guards, or steps will be deducted from the payments due the Contractor, and the Contractor will be billed for these services, work, and materials at prevailing rates.

3.03 NOTIFICATION TO UTILITY COMPANIES AND OWNERS OF BURIED PIPELINES

The Contractor is to comply with all provisions of the "Underground Facility Protection Act" (Public Law 1994, Chapter 118). The Contractor is to give notice at least three (3) business days and not more than ten (10) business days prior to the start of any work in the vicinity of existing utilities or appurtenances to the Garden State Underground Plant Location Service (N.J. One-Call System at 1-800-272-1000). The Engineer is to be furnished, in writing, with the date such notice was given and the Garden State Underground Plant Location Service "Markout Confirmation Number", prior to the start of any work. In addition, it is the responsibility of the Contractor to notify the Owner of any utility which is not a member of the "N.J. One-Call System".

3.04 WORK IN BAD WEATHER

During freezing, stormy or inclement weather, no work is to be done except such as can be done satisfactorily and in a manner to secure first-class construction throughout.

When required, protection is to be provided by use of tarpaulins, wood and building paper shelters, or other acceptable means.

During cold weather, materials are to be preheated, if required, and the materials and adjacent structure into which they are to be incorporated are to be made and kept sufficiently warm so that a proper bond will take place and a proper curing, aging or drying will result. Protected spaces are to be artificially heated by approved means which will result in a moist or dry atmosphere according to the particular requirements of the work being protected. Ingredients for concrete and mortar are to be sufficiently heated so that the mixture will be warm throughout when used.

The Contractor shall also take measures to prevent run-off from entering the work area.

3.05 EXPLOSIVES

Explosives are not to be stored at the site of the Project. If explosives are required, their use may be permitted after discussions with the Owner in consultation with the Engineer and written permission from the Owner and authorities having jurisdiction, and only under the supervision of competent licensed blasters.

* * * * *

NEW JERSEY WATER BANK PROJECT SIGN DETAILS

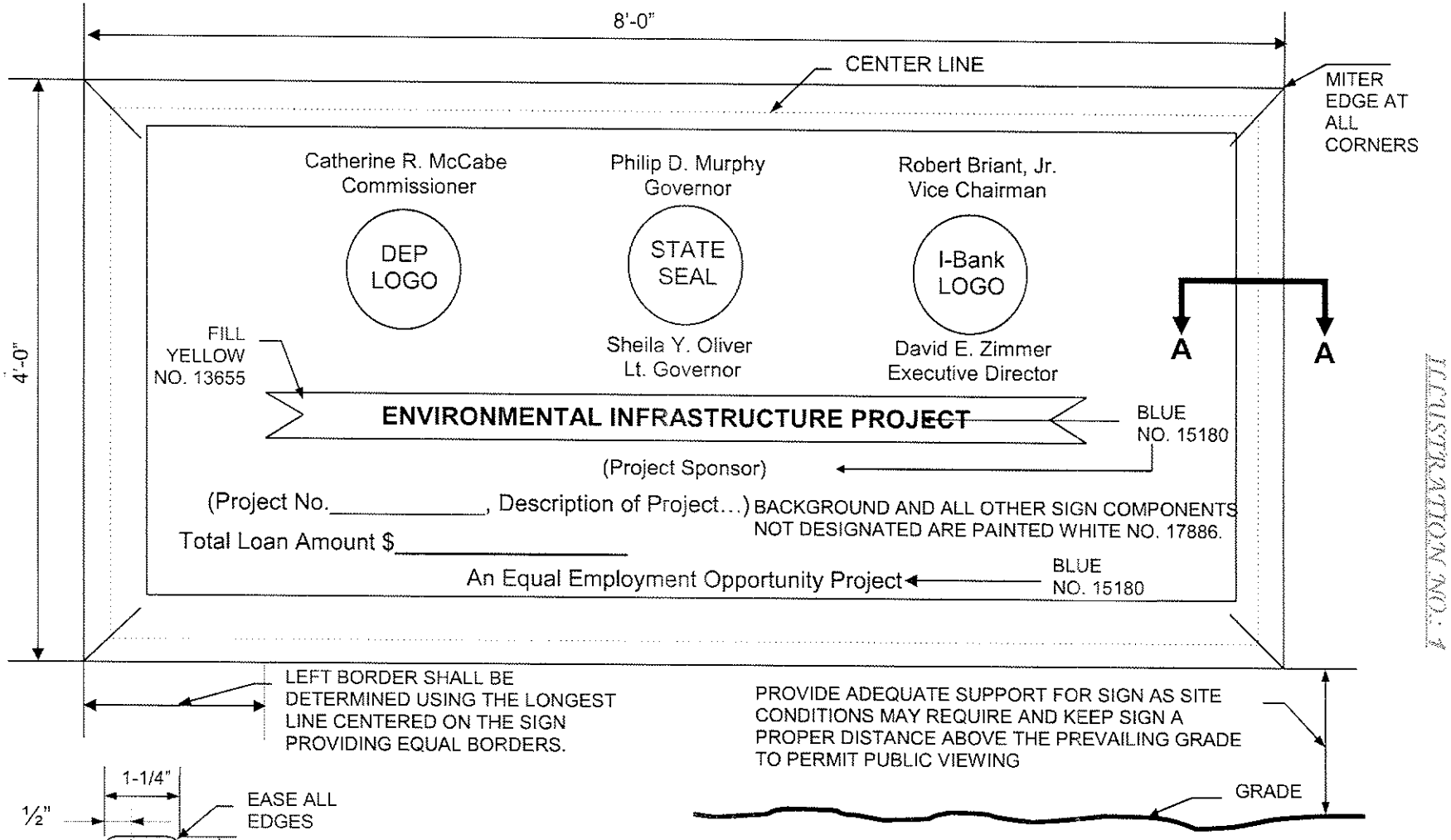

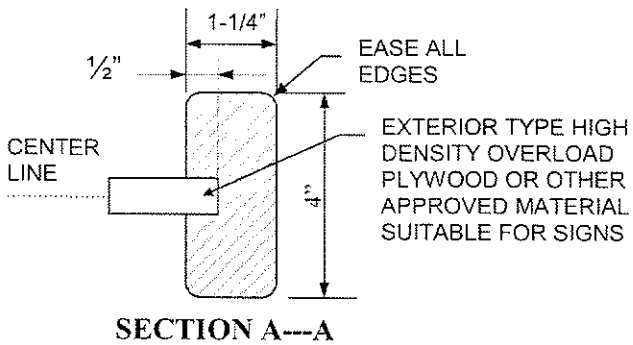

SECTION A---A

NOTE:
COLOR NUMBERS REFER TO FEDERAL COLOR STANDARD NO. 595C. LETTERING PAINTED BLACK NO. 17038 (UNLESS OTHERWISE SPECIFIED). DECALS FOR THE LOGOS AND SEAL SHALL BE AVAILABLE FROM NJDEP CONSTRUCTION CONTROL ENGINEER AT THE PRE-CONSTRUCTION CONFERENCE. FIRST NUMBER INDICATES 1=GLOSS, 2=SEMIGLOSS, 3=MATT AND SECOND NUMBER INDICATES THE COLOR TYPE AND LAST THREE NUMBERS INDICATES INTENSITY. HIGHER NUMBER (LAST 3 DIGITS) MEANS MORE DARKNESS. LETTERING SHOULD BE SIZED ACCORDINGLY TO BE LEGIBLE FOR PUBLIC VIEWING.

ILLUSTRATION NO. 1

SECTION 1030

COORDINATION

PART 1: GENERAL

1.01 WORK INCLUDED

The review and coordination of shop drawings, actual execution of the work, and testing between general construction work, equipment and piping installation, pertinent instrumentation and electrical work is the responsibility of the Contractor.

The Engineer will check each shop drawing submitted to determine whether it complies with the intent of the Contract Documents and the design. This same requirement is placed on the Contractor and his supplier.

It is the intention of the Contract Documents to place various materials of construction and related requirements in their proper place both on the Drawings and in the specifications. However, no guarantee is made that such locations are, in every instance, where the Contractor might expect to find them.

The Contractor is required to provide, or make available, all of the Contract Documents to each vendor and subcontractor, both prior to bid to ensure proper Proposals, and during construction to insure compliance with the intent of the Contract Documents. This is the sole responsibility of the Contractor.

The Engineer is not responsible for project coordination between various subcontractors, which is the responsibility of the Contractor. The Engineer will observe, by attendance at regularly scheduled job meetings, the orderly flow and progress of the work. The various subcontractors and those people responsible to them are required to interact with each other to insure that the work progresses in an orderly fashion and without exceeding the time allotted in the Contract.

The Contractor is to refer to the appropriate section of the Contract Documents which defines the limitations of the Engineer's responsibilities.

The Contractor is responsible for reading all the Specifications and following the various Contract Drawings. His review of all the Contract Documents as well as shop drawings, coordination drawings and other information required to complete the project is his sole responsibility. He is to request clarification on any matters where ambiguities might exist, in order to receive instruction as to the proper documents to follow.

All products or materials which require the selection of color finishes are to be submitted early and with sufficient lead time to permit the Owner or his Engineer or Architect to develop an overall color coordination system for use by the Contractor in the final installation. Delays in submitting such product or material samples or color charts at one

time may delay the selection process and prevent the Contractor from granting suppliers final releases for fabrication.

PART 2: PRODUCTS

Not Used

PART 3: EXECUTION

3.01 WORKING HOURS

The Contractor should generally limit construction operations and activities between the hours of 8:00 a.m to 4:30 p.m. unless stricter limitations are established by law. No pile driving, pulling or other noisy operations, or operations entailing the use of vibratory hammers or compactors will be permitted, other than between the hours of 8:00 AM. To 4:00 PM. The Contractor must also abide by the provisions of the Article of the contract entitled, "Night, Weekend & Holiday Work".

The Contractor must also have all work completed (including backfilling, plating, and cleanup) on all County roads by 3:00 p.m. each afternoon.

The Contractor shall only be permitted to work within Twin Rivers Road between 9 A.M. and 2 P.M.

These requirements will be strictly enforced by the East Windsor Township Police Department, and the Contactor shall include any hardship anticipated in his bid items.

* * * * *

SECTION 1040

FIELD ENGINEERING

PART 1: GENERAL

1.01 METHOD OF CONSTRUCTION

Before starting the work, and from time to time during its progress as the Engineer may request, the Contractor is to outline to the Engineer the methods he plans to use in performing the work and the various steps he intends to take.

1.02 ADDITIONAL INSTRUCTIONS AND DETAIL DRAWINGS

The Engineer may furnish the Contractor with additional instructions and detailed drawings as may, in the opinion of the Engineer, be required to clarify the work included in the Contract. The additional drawings and instructions, thus supplied to the Contractor, will be coordinated with the Contract Documents and will be so prepared that they can be reasonably interpreted as a part thereof. The Contractor is to carry out the work in accordance with any additional detailed drawings and instructions. Additional instructions and detail drawings are not to be considered extra work.

1.03 PIPE LOCATION

All new pipe lines are to be located substantially as indicated on the drawings, but the right is reserved to make such modifications in their location as may be found desirable to avoid interference with existing structures or for other sound reasons. Where fittings or accessories are noted on the drawings, such notation is for the Contractor's convenience and does not relieve him from laying and joining different or additional fittings where required to place pipe in proper position, without additional compensation. Where existing underground utilities are encountered which were not anticipated or indicated, the Contractor is to request from the Engineer such instructions as may be necessary to properly install new piping in order to eliminate the interference.

1.04 CHANGES IN DESIGN

If, during construction, it is found expedient by the Contractor to modify or change the design of any part of the facility, including the equipment or any part thereof, completely detailed and checked working drawings showing the proposed changes are to be submitted to the Engineer for his review. Any permitted modification or change of design as set forth above is to be at the sole discretion of the Engineer. Approval of such changes does not release the Contractor from his obligation or guarantees, nor are any of the conditions of the Contract abrogated thereby. Any additional costs, including redesign costs to this Contract resulting from these changes, are to be borne by the Contractor. The Contractor is further to note the Contract Article entitled "Changes".

PART 2: PRODUCTS

Not Used

PART 3: EXECUTION

Not Used

* * * * *

SECTION 1050

REGULATIONS

PART 1: GENERAL

1.01 WORK INCLUDED

All work under this Contract is to comply with all applicable requirements of Federal, State and local statutes, regulations, and codes, and especially the safety provisions contained therein.

Certain work to be done within the scope of this Contract may be required to meet the specification of persons, municipalities or bodies other than the Owner. The Contractor is to be responsible for obtaining the approval and acceptance of his completed work by such persons, municipalities, counties and similar bodies. Such work may include, but is not to be restricted to installation of sidewalks, curbs, pavement or utilities; plumbing, electrical and building construction work or other incidental work required to complete the Contract.

PART 2: PRODUCTS

Not Used

PART 3: EXECUTION

3.01 ENVIRONMENTAL PROTECTION

The Contractor is to minimize environmental impact due to his construction operations during all phases of his work. This shall include, but is not limited to, **prohibition** of the following construction procedures.

1. Dumping of spoil material into any stream corridor, any wetlands, any vernal habitats, any surface waters, any sites listed or eligible for listing on the New Jersey or National Registers of Historic Places or any unspecified locations.

2. Indiscriminate, arbitrary, or capricious operation of equipment in any stream corridors, wetlands, vernal habitats, or surface waters.

3. Pumping of silt-laden water from trenches or other excavations into surface waters, stream corridors, wetlands or vernal habitats.

4. Damaging vegetation adjacent to or outside of the access road or the right of way.

5. Disposal of trees, brush, and other debris in any stream corridors, wetlands, vernal habitats, surface waters, or at unspecified locations.

6. Permanent or unspecified alteration of any flow line of any stream.

7. Open burning of project debris.

8. Use of calcium chloride, petroleum products, or other chemicals for dust control.

9. Use of asphaltic mulch binder.

10. Any unpermitted discharge of sewage.

11. Discharge of test waters with high chemical disinfectant or other pollutant concentrations.

The Contractor shall protect, to the dripline, all trees not designated by the Engineer to be removed.

The Contractor is directed to the appropriate sections of the Specifications for additional information regarding environmental work and protection.

3.02 LABOR, SAFETY, HEALTH AND SECURITY REGULATIONS

The Contractor is to refer to the appropriate portions of Information for Bidders regarding Labor, Safety, Health and Security Regulations.

The Contractor is to provide adequate signs, barricades, red lights and uniformed guards and take all necessary precautions for the protection of the workers, the work and the safety of the public. All traffic control shall be in accordance with the requirements of the latest edition of the USDOT "Manual of Uniform Traffic Control Devices. All barricades and obstructions are to be protected at night by suitable signal lights which are to be lit from sunset to sunrise. Barricades are to be of substantial construction and painted such as to increase their visibility at night. Suitable warning signs are to be so placed and illuminated at night as to show in advance where construction, barricades or detours exist.

The Contractor is to keep on proper lights each night between the hours of sunset and sunrise at and upon all portions of his work; upon all sites in connection with the work, when required by law or regulations, or when deemed necessary by the Owner or by the proper authorities, or when required by the liability insurance coverers, and is to be solely responsible for all injuries and damages resulting from neglect or failure to comply with the provisions of the Contract in this respect. Night lighting must be so sized, concentrated and located so as to cast sufficient illumination around new construction and excavations. All excavations and obstructions must be properly marked, lighted and provided with railing and other guards.

The Contractor is to maintain sufficient guards by day and night to prevent accidents of any kind or character whatsoever, and will be solely liable for any damage which may arise from any negligence on his part or that of his agents and employees.

If, at any time, in the opinion of the Owner or the Engineer, the work is not properly lighted, barricaded, and in all respects safe in respect to public travel, persons on or about the work, or public or private property, the Owner and the Engineer will have the right, but not the obligation, to order such safeguards to be erected and such precautions to be taken as he deems advisable, and the Contractor is to promptly comply with such orders. If, under such circumstances, the Contractor does not or cannot immediately put the same into proper and approved condition or if the Contractor or his representative is not upon the grounds so that he can be immediately notified of this insufficiency of safety precautions in accordance with the procedures for notification of the Contractor specified under "Emergency Telephone", then the Owner may put the work into such a condition that it shall be, in his opinion, safe and the Contractor is to pay all expenses of such labor and materials as may have been used for this purpose by him or by the Owner. Such action of the Owner and/or Engineer, or their failure to take such action, will in no way relieve the Contractor of the entire responsibility for any cost, loss, or damage by any party sustained on account of the insufficiency of the safety precautions taken by the Contractor or by the Owner acting under authority of this Section.

3.03 SANITATION

Sanitary conveniences, properly screened from public observation, for the use of all persons employed on the work and beginning with the first persons engaged in preliminary operations, are to be provided and maintained by the Contractor in sufficient numbers, in such a manner and at such locations as will be approved. Sanitary facilities are to be completely self-contained, chemically treated and regularly serviced.

3.04 SALES TAX EXEMPTION

The Contractor is to refer to the Information for Bidders regarding sales tax exemptions.

3.05 FIRE SAFETY

The Contractor is held responsible and is to maintain conditions which promote fire safety in his operations at all times. Materials which could constitute a fire hazard such as gasoline, paints, wood and paper products are to be safely stored.

* * * * *

SECTION 1060

ALTERNATES

PART 1: GENERAL

1.01 WORK INCLUDED

The Contractor is to refer to the appropriate section of the Information for Bidders regarding the substitution of alternate materials and equipment.

PART 2: PRODUCTS

Not Used

PART 3: EXECUTION

Not Used

* * * * *

SECTION 1070

MEASUREMENT AND PAYMENT

PART 1: GENERAL

1.01 WORK INCLUDED

1.02 DESCRIPTION

A. The items listed in the Bid form constitute all of the pay items for the completion of the Work. The same items are listed below beginning with Article 1.05. No direct or separate payment will be made for providing miscellaneous temporary or accessory works, plant, services, Contractor's field office, layout surveys, sanitary requirements, shop drawing submittals, testing, safety devices, approval and record drawings, water supplies, power, heat, maintaining traffic, removal of waste, watchmen, bonds, insurance, mobilization and demobilization, environmental protection and erosion control, and all other requirements of the General Conditions, Supplementary Conditions, General Requirements and other sections of the Contract Documents, or which can be reasonably inferred therefrom. Compensation for all such services, things and materials shall be included in the prices stipulated for the unit price, lump sum and extra work unit price pay items listed herein.

B. Each unit price, lump sum and extra work unit bid price will be deemed to include an amount considered by Contractor to be adequate to cover Contractor's overhead and profit for each separately identified item, unless otherwise specifically noted.

1.03 ESTIMATE OF QUANTITIES

A. Estimated quantities for unit price, extra work unit price pay items, as listed in the Form of Bid, are approximate only and are included solely for the purpose of comparison of Bids. Owner does not expressly or by implication agree that the nature of the materials encountered or the actual quantities of material encountered or required will correspond therewith and reserves the right to increase or decrease any quantity or to eliminate any quantity as Owner may deem necessary. Contractor will not be entitled to any adjustment in a unit bid price as a result of any change in an estimated quantity and agrees to accept the aforesaid unit bid prices as complete and total compensation for any additions or deductions caused by a variation in quantities as a result of more accurate measurement, or by any changes or alterations in the Work ordered by Engineer in writing.

1.04 RELATED PROVISIONS

A. Payments to Contractor: Refer to General Conditions, Supplemental General Conditions and Contract.

B. Changes in Contract Price: Refer to General Conditions, Supplemental General Conditions and Contract.

1.05 BID ITEMS

A. FOR FURNISHING AND INSTALLING HIGH DENSITY POLYETHYLENE MAINS (INCLUDING EXCAVATING, BACKFILL WITH SUITABLE EXCAVATED MATERIAL, CONNECTING, REMOVING OF EXISTING PIPE, AND ALL INCIDENTAL WORK) (Items 1a thru 1c)

1. Measurement

a. Measurement for Furnishing and Installing High Density Polyethylene (HDPE) Pipe shall be on a linear foot basis using the actual linear footage of pipe used in the work for the replacement of existing water mains and existing hydrant laterals.

b. Depth of trench shall be measured from the actual ground elevation to the invert of the pipe. Where the depth measured from the actual ground elevation to the invert of the pipe exceeds eight (8) feet exclusive of foundation material, excavation required for the excess depth shall be paid for under Item 8.

2. Payment

a. Payment for furnishing and installing high density polyethylene pipe will be made for the unit price bid for Items 1a thru 1c on the Bid Forms. This price and payment shall be full compensation for, but not limited to, the following:

(1) Furnish all labor, materials, tools and equipment required for: the installation of new HDPE pipe and specified appurtenances for the replacement of existing water mains and hydrant laterals, including excavating; backfilling with suitable excavated material; compaction; removing existing hydrants, removing hydrant laterals; removing existing valve boxes; abandoning or removal of existing mains; reconnection of services; disinfecting and pressure testing.

(2) Site preparation including cutting existing pavement; rock excavation; soil erosion and sediment control; protection of all existing utilities and structures; dewatering and drainage; removing and disposing of excess excavated material; providing safe access

to private property; sheeting and bracing; providing full restraint to existing valves which will not be replaced.

(3) All traffic control devices including all required warning signs, no parking signs, barricades, obstruction lights, and cones shall be included under the unit price bid under this item.

B. FOR FURNISHING AND INSTALLING HIGH DENSITY POLYETHYLENE FITTINGS AND COUPLINGS (INCLUDING EXCAVATION, BACKFILLING WITH SUITABLE EXCAVATED MATERIAL, CONNECTING, BLOCKINGS, AND ALL INCIDENTAL WORK) (Item 2)

1. Measurement

a. Measurement for Installing High Density Polyethylene Fittings shall be per pound used in the work for the replacement of existing hydrant laterals and water mains.

2. Payment

a. Payment for installing high density polyethylene fittings will be made for unit price bid for Item 2 on the Bid Forms. This price and payment shall be full compensation for, but not limited to, the following:

(1) Furnish all materials, labor, tools and equipment required for installing HDPE molded and fabricated fittings, HDPE couplings, HDPE MJ adapters, and flex restraint devices, required for the construction of water mains. Work under this Item shall include all necessary excavation, backfill with suitable excavated material, compaction and required retainer glands, blocking and bracing.

b. Payment under this item shall be based upon the net weight of fittings actually installed. Weights for fittings and couplings shall be those listed by the manufacturer of the fittings used. The price bid shall include the cost of blocking and bracing with Class "D" concrete and furnishing and installing any rodding and strapping and retainer glands that may be required.

C. FOR FURNISHING AND INSTALLING CEMENT LINED DUCTILE IRON PIPE (INCLUDING EXCAVATING, BACKFILL WITH SUITABLE EXCAVATED MATERIAL, CONNECTING, REMOVING OF EXISTING PIPE, AND ALL INCIDENTAL WORK) (Items 3a and 3b)

3. Measurement

a. Measurement for Furnishing and Installing Cement Lined Ductile Iron Pipe shall be on a linear foot basis using the actual linear footage of pipe used in the work for the replacement of existing water mains.

b. Depth of trench shall be measured from the actual ground elevation to the invert of the pipe. Where the depth measured from the actual ground elevation to the invert of the pipe exceeds eight (8) feet exclusive of foundation material, excavation required for the excess depth shall be paid for under Item 8.

4. Payment

a. Payment for furnishing and installing cement lined ductile iron pipe will be made for the unit price bid for Items 3a and 3b on the Bid Forms. This price and payment shall be full compensation for, but not limited to, the following:

(1) Furnish all labor, materials, tools and equipment required for: the installation of new, restrained ductile iron water pipe for the replacement of existing water mains, including excavating; backfilling with suitable excavated material; compaction; and disinfecting and pressure testing. All pipe shall be fully restrained using ductile iron retaining glands, restraining rods, thrust blocks, etc. Work shall be conducted in accordance with AWWA 600 latest revision.

(2) Site preparation including cutting existing pavement; rock excavation; soil erosion and sediment control; protection of all existing utilities and structures; dewatering and drainage; removing and disposing of excess excavated material; providing safe access to private property; sheeting and bracing; providing full restraint to existing valves which will not be replaced.

D. FOR FURNISHING AND INSTALLING CEMENT LINED DUCTILE IRON FITTINGS, AND FLEXIBLE COUPLINGS (INCLUDING EXCAVATING, BACKFILLING WITH SUITABLE EXCAVATED MATERIAL, CONNECTING, BLOCKINGS, AND ALL INCIDENTAL WORK) (Item 4)

1. Measurement

a. Measurement for Furnishing and Installing Cement Lined Ductile Iron Fittings shall be per pound used in the work for the replacement of existing water mains.

2. Payment

a. Payment for furnishing and installing cement lined ductile iron fittings will be made for unit price bid for Item 4 on the Bid Forms. This price and payment shall be full compensation for, but not limited to, the following:

(1) Furnish and install ductile iron fittings, sleeves, flexible couplings, and flexible transition couplings required for the

construction of water mains. Work under this Item shall include all necessary excavation, backfill with suitable excavated material, compaction and required restraining glands, blocking, bracing, rodding and strapping.

(2) Payment under this item shall be based upon the net weight of fittings actually installed. Weights for fittings shall be those listed in ANSI/AWWA C110/A21.5 latest revision for type of fitting installed. Weights for couplings shall be those listed by the manufacturer of the fittings used. The price bid shall include the cost of blocking and bracing with Class "D" concrete and furnishing and installing any rodding and strapping and retainer glands that may be required.

E. FOR FURNISHING AND INSTALLING GATE VALVES (Items 5a thru 5d)

1. Measurement

a. Measurement for Furnishing and Installing Gate Valves shall be on a unit price basis based upon the actual number of gate valves installed.

2. Payment

a. Payment for installing gate valves will be made for unit prices bid for Items 5a thru 5d (as appropriate) on the Bid Forms. This price and payment shall be full compensation for, but not limited to, the following:

(1) The unit price bid under this Item shall apply to installation of new gate valves and valve boxes as shown on the Drawings. This item includes installation of new gate valves and valve boxes at locations shown on the Drawings or directed by the Owner or Engineer

(2) The work shall also include pavement cutting, excavation, dewatering, removal of excavated material, installation and removal of sheeting and bracing, backfill with suitable excavated material, and compaction in accordance with the Contract Documents and all municipal requirements.

F. FOR FURNISHING AND INSTALLING FIRE HYDRANTS (Item 6)

1. Measurement

a. Measurement for Installing Fire Hydrants shall be on a unit price basis based upon the actual number of hydrants installed.

2. Payment

a. Payment for installing new fire hydrants will be made at the unit price bid for Item 6 on the Bid Forms. This price and payment shall be full compensation for, but not limited to, the following:

(1) Furnish all labor, equipment and material necessary to install new hydrants; at locations shown on the Contract Drawings. The work shall include all required restraint in full accordance with the Contract Drawings and detailed Specifications. The unit price bid under this Item shall also apply to installation of fire hydrants at locations shown on the Drawings or directed by the Owner or Engineer where there are presently no existing hydrants.

(2) Furnish the necessary ductile iron retainer glands and all nuts, bolts, and gaskets for new hydrants.

(3) The work shall include all pavement cutting; excavation; backfill of suitable excavated material; sheeting and bracing; dewatering; disposal of excavated material; installation of all thrust restraint; and all else necessary to make a complete hydrant connection.

(4) The work shall include all pressure testing, flushing, and disinfection.

(5) The work associated with removing existing gate valves; hydrant laterals; fittings; etc. will be paid for under separate items.

G. FOR INSTALLATION OF SERVICES (Item 7)

1. Measurement

a. Measurement for Installation of 1-inch Services to Curb Valves shall be on a unit price basis based upon the actual number of services installed up to and including the new curb box and valve.

b. Measurement for 1-inch Service Connection to Existing Service line shall be on a unit price basis based upon linear footage of copper service line required to connect the new Curb Valve to the existing service.

c. Measurement for Installation of 2-inch Services to existing meter pits shall be on a unit price basis based upon the actual number of services installed up to the existing meter pit.

2. Payment

a. Payment for installation of 1-inch services to curb valves will be made for unit price bid for Item 7a on the Bid Forms. This price and payment shall be full compensation for, but not limited to, the following:

(1) All test pitting; exploration work; excavation; backfill and compaction for suitable excavated material; temporary surface restoration; temporary pavement; removal of existing service pipe; installation of service corporation and service pipe, fittings, curb boxes with and valves, adaptors or couplings as required.

(2) All service materials required, including adaptors, service pipe, curb valves, and curb boxes shall be furnished by the Contractor.

(3) Permanent surface restoration and permanent pavement for service replacement will be paid for under separate items.

b. Payment for 1-inch service connection to existing service lines will be made for unit price bid for Item 7b on the Bid Forms. This price and payment shall be full compensation for, but not limited to, the following:

(1) All test pitting; exploration work; excavation; backfill and compaction for suitable excavated material; temporary surface restoration; temporary pavement; cutting and removal of existing service pipe; installation of service pipe, fittings, adaptors or couplings as required.

(2) Existing curb box removal, existing curb valve abandonment and associated restoration.

(3) All service materials required, including adaptors, service pipe, curb valves, and curb boxes shall be furnished by the Contractor.

(4) Permanent surface restoration and permanent pavement for service replacement will be paid for under separate items.

c. Payment for connection of 2-inch services to existing meter pits will be made for unit price bid for Item 7c on the Bid Forms. This price and payment shall be full compensation for, but not limited to, the following:

(1) All test pitting; exploration work; excavation; backfill and compaction for suitable excavated material; temporary surface restoration; temporary pavement; cutting and removal of existing service pipe; installation of service pipe, fittings, adaptors or couplings as required.

(2) All service materials required, including adaptors, service pipe, curb valves, and curb boxes shall be furnished by the Contractor.

(3) Permanent surface restoration and permanent pavement for service replacement will be paid for under separate items.

H. FOR EXCAVATION IN TRENCHES AT DEPTH IN EXCESS OF 8 FEET AND FOR TEST PITS (Item 8)

1. Measurement

a. Measurement for payment under this item shall be computed on the following basis:

Trenches:

(1) Depth: From a plane 8 feet below the original ground surface to the invert of the water main.

(2) Width: In unsheeted trenches between vertical planes separated by a distance equal to the inside diameter of the pipe plus two (2) feet. Where closed sheeting is used between vertical planes separated by a distance equal to the inside diameter of the pipe plus three feet.

(3) Length: The length of trench as measured along the ground surface.

Test Pits:

The dimensions of test pits for payment shall be as ordered by the Engineer and as measured in the field.

2. Payment

a. For the unit price bid per cubic yard under this item, the Contractor shall excavate at depths in excess of 8 feet as measured from the ground surface to the pipe invert, and shall

excavate test pits to locate utilities ahead of pipe laying. Test pits shall be located as directed by the Engineer.

b. The work shall include all excess excavation, sheeting, bracing and dewatering required and also all pertinent requirements of Item 1.

c. The unit prices bid under this item shall be in addition to the unit prices bid under Item 1, and shall be full compensation for all additional work required to install water mains at depths in excess of 8 feet as measured from the ground surface to the pipe invert, and for excavation of test pits at locations as directed. Excavation for test pits shall include hand methods.

I. FOR FURNISHING AND PLACING DENSE GRADED AGGREGATE (Item 9)

1. Measurement

a. Measurement and payment under this item will be made for the depths required and for a pay width equal to two (2) feet plus the nominal diameter of the pipe, less the volume of the pipe surrounded. Volume of pipe will be calculated based upon the nominal pipe diameter.

2. Payment

a. All quantities of quarry-processed stone used under this Item will be paid for at the price bid per cubic yard.

b. The unit price paid per cubic yard under this Item shall be compensation in full for furnishing, handling, placing, grading, and compacting of quarry-processed stone, in all areas as outlined previously.

c. Also included in this Item shall be the cost of the offsite disposal of existing excavated material from the excavation which is displaced by the volume of dense graded aggregate.

J. FOR FURNISHING AND PLACING BANK RUN SAND AND GRAVEL (Items 10a and 10b)

1. Measurement

a. Measurement for payment under this item will be made for the depths required and for a pay width equal to two (2) feet plus

the nominal diameter of the pipe, less the volume of the pipe surrounded. Volume of pipe will be calculated based upon the nominal pipe diameter.

2. Payment
   a. All quantities of bank run sand bedding or bank run sand and gravel backfill authorized and used under this Item will be paid for at the price bid per cubic yard.

   b. The unit price paid per cubic yard under this Item shall be compensation in full for furnishing, handling, placing, grading, and compacting of bank run sand and gravel in all areas as previously mentioned.

   c. Also included in this item shall be the cost of the offsite disposal of existing excavated material from the excavation which is displaced by the volume of bank run sand and gravel.

K. FOR PAVEMENT REPLACEMENT (Item 11)

1. Measurement

   a. Measurement for payment under this item will be made on a square yard basis, based on the length of the trench and pay width equal to the width shown in the restoration details and Contract Plans.

2. Payment

   a. For the unit prices bid under this item, the Contractor shall furnish all labor, materials and equipment and such additional work as may be required for temporary (subbase and base course), and permanent (surface course) pavement replacement. Work shall also include all traffic control signage, temporary and permanent pavement striping and numbering repainted in-kind, milling, tack coats, and all other work as required for placement of pavement.

   b. Payment for temporary (subbase and base course) pavement replacement will be based upon linear footage repaved, as measured by the length of the installed pipe along the centerline of the newly installed pipe. Payment for temporary pavement resulting from water service replacements shall be included in the linear footage of newly installed pipe.

   c. Payment for permanent (surface course) pavement replacement will be based on the actual quantity of pavement placed measured in square yards.

L. FOR CURBING REPLACEMENT (Item 12)

1. Measurement

   a. Measurement for payment under this item will be made based upon linear footage of curbing replaced.

2. Payment

   a. For the unit prices bid under this item, the Contractor shall furnish all labor, materials and equipment and such additional work as may be required for curbing replacement, including existing granite, belgian block, stone, or concrete curbing as directed by the Engineer

   b. Payment will be made only for curbing ordered to be removed in order to perform the work on the basis of the unit price bid per linear foot. No payment will be made for repair of damages to existing curbing caused by the careless operation of the Contractor. The unit price bid under this item shall include all concrete and forms required and no payment other than that included under the unit price bid under this item will be made for this work. In addition, any repair to damaged pavement shall also be included in the unit price bid under this item.

M. FOR SIDEWALK REPLACEMENT (Item 13)

1. Measurement

   a. Measurement for payment under this item will be made for a pay width equal to the width shown in the restoration details times the length of the area restored as measured along the alignment of the pipe, or where directed by the Engineer.

2. Payment

   a. For the unit price bid under this item, the Contractor shall provide all labor, materials, and equipment and such additional work as may be required for sidewalk replacement ordered by the Engineer.

   b. Payment will be made for the concrete sidewalk, temporary and permanent, ordered to be removed in order to perform the work, on the basis of the unit prices bid per square yard. No payment will be made for repair of damage to sidewalk caused by the careless operation of the Contractor.

c. The unit prices bid under this item shall include all concrete reinforcement and forms required and no payment other than that included under the unit prices bid for this item will be made for this work.

N. FOR TOPSOILING, FERTILIZING AND SEEDING, EXISTING LAWNS AND/OR IMPROVED AREAS (Item 14)

1. Measurement

a. Measurement for payment under this item will be made for a pay width equal to the width shown in the restoration details times the length of the area restored as measured along the alignment of the pipe, or where directed by the Engineer.

2. Payment

a. For the unit price bid under this item, the Contractor shall provide all labor, materials, and equipment and such additional work as may be required to adequately provide vegetation over the entire area cleared and/or disturbed during construction.

b. Payment for topsoiling, fertilizing and seeding of existing lawns and/or improved areas shall not to exceed a maximum pay width equivalent to twenty (20) feet. No payment will be made for repair of damages caused by careless operation of the Contractor.

O. FOR MOBILIZATION (Item 15)

1. Work Included

a. Measurement for Mobilization of equipment and materials shall be on a lump sum basis. The lump sum price bid for mobilization shall be payable to the contractor whenever he shall have completed 10 percent of the work for that item. For the purposes of this item, 10 percent of the work shall be considered completed when the total of payments earned, exclusive of the amount bid for this item, shown on the monthly certificates of the approximate quantities of work done, shall exceed 10 percent of the total price bid for the awarded Contract.

2. Payment

a. Payment for mobilization will be made at the lump sum price bid for this item in the proposal, which shall include the cost of initiating the contract. The provisions for payment for the item mobilization supersede any provisions elsewhere in the specifications for including the costs of these initial services and facilities in the prices bid for the various items scheduled in the proposal. The lump sum price bid for mobilization for each contract item (Base Bid, Supplemental Bid Item A, and Supplemental Bid Item B) shall be payable to the contractor whenever he shall have completed 10 percent of the work of the contract work for that item.

b. Maximum bid prices for Mobilization for each contract item shall be based on Base Bid Contract Price, and shall be limited to the maximum amounts set forth in N.J.A.C. 7:14-2.9(b), as follows:

Original Contract Bid Amount (Including Mobilization)		Maximum Amount for Mobilization
From	To	
$0	$100,000	$3,000
$100,000	$500,000	$15,000
$500,000	$1,000,000	$30,000
$1,000,000	$2,000,000	$60,000
$2,000,000	$3,000,000	$90,000
$3,000,000	$4,000,000	$120,000
$4,000,000	$5,000,000	$125,000
$5,000,000	$6,000,000	$150,000
$6,000,000	$7,000,000	$175,000
$7,000,000	$10,000,000	$200,000
$10,000,000	-----	2.5% of the bid amount

P. TRAFFIC CONTROL ALLOWANCE (Item 16)

1. Work Included

a. The traffic control allowance, Item 16, will apply to direction of traffic by the police for the Contract Work per Section 01576. All costs associated with police officers or approved security firm for traffic control will be paid under Item 16.

b. All other costs associated with traffic control for the Contract Work, including traffic control devices, signage, vehicles, equipment, personnel and administrative costs, shall be included in the various unit bid prices bid on the Bid Form.

2. Payment

a. Payment for police officers provided by the municipal police departments or for employees of the approved security firm to direct traffic will be made based on the actual amount invoiced to the Contractor by the municipal police departments or approved security firm. The Contractor will pay the municipal police departments directly. No markup will be allowed on police officer or approved security firm payments. The allowance price established in the Bid Form is for bidding purposes only and the amount paid for Traffic Control may differ from this amount.

b. Payment for any permit fees will be made based on the actual amount paid to the permitting agency. No markup will be paid on permitting fees.

Q. ALLOWANCE OF ASPHALT PRICE ADJUSTMENT (Item 17)

1. Work Included

For the allowance provided under this item, the Owner will make monthly price adjustments for asphalt binder usage. The Owner will calculate asphalt price adjustments based on the quantities of Items containing asphalt binder constructed during a given month.

Price adjustments may result in an increased payment to the Contractor for increases in the price index and may result in a reduction in payment for decreases in the price index.

2. Eligibility

Pursuant to section 16 of P.L. 1971, c. 198 (C.40A:11-16) any project that includes the use of 1,000 tons or more of hot mix asphalt, shall be eligible for any asphalt price adjustment reflecting changes in the cost of asphalt cement. Any project that includes the use of less than 1,000 tons of hot mix asphalt, is ineligible for any asphalt price adjustment, unless during the course of the project including change orders, any quantity of hot mix asphalt exceeds 1000 tons.

3. Asphalt Price Adjustment Calculation

The asphalt price adjustment shall be calculated in accordance with the formula and relevant instructions published in the most recent edition of the

New Jersey Department of Transportation Standard Specifications for Road and Bridge Construction as revised by the "Standard Inputs" periodically issued by the Department of Transportation.

The Owner will calculate the asphalt price adjustment by the following formula:

$$A = (MA - BA) \times T$$

Where:

A = Asphalt Price Adjustment

MA = Monthly Asphalt Price Index

BA = Basic Asphalt Price Index

T = Tons of New Asphalt Binder[1]

[1] The Owner will determine the weight of asphalt binder for price adjustment by multiplying the percentage of new asphalt binder in the approved job mix formula by the weight of the item containing asphalt binder. If a Hot Mix Asphalt item has a payment unit other than ton, the Owner will apply an appropriate conversion factor to determine the number of tons used.

For TACK COAT and PRIME COAT, the Owner will calculate asphalt price adjustments by the following formula:

$$A = (B) \times \frac{(MA - BA)}{BA} \times (C) \times (M) \times (G)$$

Where:

A = Asphalt Price Adjustment

B = Bid Price for Tack Coat/ Prime Coat

MA = Monthly Asphalt Price Index

BA = Basic Asphalt Price Index

C = Petroleum Content of the Tack Coat and Prime Coat in Percent by Volume:

Use 100% for cutbacks and Tack Coat 64-22

60% for Polymer Modified Tack Coat

60% for RS or similar type emulsions

M = Percentage of Bid Price Applicable to Materials Only: Use 82%

G = Gallons of Tack Coat and Prime Coat Furnished and Applied

The monthly asphalt price index, as determined by the New Jersey Department of Transportation (NJDOT), will be the average of quotations from suppliers serving the area in which the Project is located, and will be determined by the NJDOT each month. The NJDOT will post the monthly asphalt price index every month on the Department's web site.

http://www.state.nj.us/transportation/business/trnsport/PriceIndex.shtm

The basic asphalt price index is the asphalt price index for the month before the opening of bids. The Owner will use the asphalt price index for the month before the regular monthly estimate cut-off date as the monthly asphalt price index.

If the monthly asphalt price index increases 50 percent or more over the basic asphalt price index, do not perform work on Items containing asphalt binder without written approval from the Engineer.

4. Measurement and Payment

An allowance amount of five thousand dollars ($5,000) has been determined for this Item, and is included in the Bid pages. The allowance item shall be added with the other items to determine the total base bid. The allowance is only for items eligible for an asphalt price adjustment.

Payment shall be for the lump sum price calculated in Section 3, above, based on the quantities of Items containing asphalt binder constructed during a given month. All invoices for payment shall be accompanied by the calculation of any asphalt price adjustment and a showing of the current month's Asphalt Price Index and the Basic Asphalt Price Index established at the time of Bid.

Payment for the difference between the actual total cost and the contract allowance will be made through the final quantities change order with either a reduction in cost to the contract (if actual cost is less than the allowance amount) or an addition to the contract price (if the actual cost exceeds the allowance amount).

R. ALLOWANCE OF FUEL PRICE ADJUSTMENT (Item 18)

1. Work Included

For the allowance provided under this item, the Owner will make monthly price adjustments for fuel usage for Items listed in the table below through the duration of the Contract. The Owner will calculate fuel price adjustments based on the monthly pay quantities of listed Items using the fuel usage factors listed in the table below.

Price adjustments may result in an increased payment to the Contractor for increases in the price index and may result in a reduction in payment for decreases in the price index.

If the as-built quantity of an Item listed in the table below differs from the sum of the quantities in the monthly Estimates, and the as-built quantity cannot be

readily distributed among the months that the Item listed in the table below was constructed, then the Owner will determine fuel price adjustment by distributing the difference in the same proportion as the Item's monthly Estimate quantity is to the total of the item's monthly estimates.

2. Eligibility

The fuel requirement for items not list in the table below, and for pay items in the bid specifications calling for less than 500 gallons of fuel, shall not be eligible for a fuel price adjustment. If more than one pay item has the same nomenclature but with different thicknesses, depths, or types, each individual pay item must require 500 gallons or more of fuel to be eligible for a fuel price adjustment. If more than one pay item has the exact same nomenclature, similar pay items shall be combined and this combination must require 500 gallons or more of fuel to be eligible for the fuel price adjustment. The types of fuel furnished shall be at the option of the contractor.

3. Fuel Price Adjustment Table

Fuel Price Adjustments	
Items	**Fuel Usage Factor**
EXCAVATION, UNCLASSIFIED	0.5 Gallons per Cubic Yard
EXCAVATION, REGULATED MATERIAL	0.5 Gallons per Cubic Yard
EXCAVATION, ACID PRODUCING SOIL	0.5 Gallons per Cubic Yard
REMOVAL OF PAVEMENT	0.25 Gallons per Square Yard
HMA MILLING, 3" OR LESS	0.25 Gallons per Square Yard
HMA MILLING, MORE THAN 3" TO 6"	0.25 Gallons per Square Yard
CONCRETE MILLING,	0.25 Gallons per Square Yard
HMA PROFILE MILLING	0.25 Gallons per Square Yard
BREAKING PAVEMENT	0.25 Gallons per Square Yard
RUBBLIZATION	0.25 Gallons per Square Yard
SUBBASE	1 Gallon per Cubic Yard
I-___ SOIL AGGREGATE	1 Gallon per Cubic Yard
SOIL AGGREGATE BASE COURSE, ___ " THICK	0.30 Gallon per Square Yard per Inch
SOIL AGGREGATE BASE COURSE, VARIABLE THICKNESS	1 Gallon per Cubic Yard
DENSE-GRADED AGGREGATE BASE COURSE, ___ " THICK	0.30 Gallon per Square Yard per Inch
DENSE-GRADED AGGREGATE BASE COURSE, VARIABLE THICKNESS	1.00 Gallon per Cubic Yard
CONCRETE BASE COURSE, ___ " THICK	0.25 Gallons per Square Yard
CONCRETE BASE COURSE, REINFORCED ___ " THICK	0.25 Gallons per Square Yard
ASPHALT STABILIZED DRAINAGE COURSE	2.50 Gallons per Ton

Fuel Price Adjustments	
OPEN-GRADED ___ FRICTION COURSE	2.50 Gallons per Ton
MODIFIED OPEN-GRADED ___ FRICTION COURSE ___	2.50 Gallons per Ton
ULTRA-THIN FRICTION COURSE	2.50 Gallons per Ton
HOT MIX ASPHALT ___ ___ ___ SURFACE COURSE	2.50 Gallons per Ton
HOT MIX ASPHALT ___ ___ ___ INTERMEDIATE COURSE	2.50 Gallons per Ton
HOT MIX ASPHALT ___ ___ ___ BASE COURSE	2.50 Gallons per Ton
STONE MATRIX ASPHALT ___ SURFACE COURSE	2.50 Gallons per Ton
CONCRETE SURFACE COURSE, ___ " THICK	0.25 Gallons per Square Yard
DIAMOND GRINDING OF CONCRETE SURFACE COURSE	0.25 Gallons per Square Yard
DIAMOND GRINDING EXISTING CONCRETE PAVEMENT	0.25 Gallons per Square Yard
CONCRETE BRIDGE APPROACH	0.50 Gallons per Cubic Yard
CONCRETE CULVERT	1.00 Gallon per Cubic Yard
CONCRETE FOOTING	1.00 Gallon per Cubic Yard
CONCRETE WING WALL	1.00 Gallon per Cubic Yard
CONCRETE PIER COLUMN Protection, HPC	1.00 Gallon per Cubic Yard
CONCRETE PIER COLUMNS AND CAP	1.00 Gallon per Cubic Yard
CONCRETE ABUTMENT WALL	1.00 Gallon per Cubic Yard
CONCRETE PIER SHAFT	1.00 Gallon per Cubic Yard
CONCRETE PEDESTRIAN BRIDGE	1.00 Gallon per Cubic Yard
CONCRETE Bridge DECK	1.00 Gallon per Cubic Yard
CONCRETE Bridge DECK, HPC	1.00 Gallon per Cubic Yard
CONCRETE BRIDGE SIDEWALK	1.00 Gallon per Cubic Yard
CONCRETE BRIDGE SIDEWALK HPC	1.00 Gallon per Cubic Yard
CONCRETE Bridge PARAPET	1.00 Gallon per Cubic Yard
CONCRETE Bridge PARAPET HPC	1.00 Gallon per Cubic Yard
CAST-IN-PLACE CONCRETE PILES, DRIVEN ___ " DIAMETER	1.00 Gallon per Cubic Yard
RETAINING WALL, LOCATION NO.___ ___	0.10 Gallon per Square Foot
NON-VEGETATIVE SURFACE, HOT MIX ASPHALT	2.50 Gallons per Ton
COLOR-COATED NON-VEGETATIVE SURFACE, HOT MIX ASPHALT	2.50 Gallons per Ton

If an item listed in the table above has a payment unit which differs from that listed above, the Owner will apply an appropriate conversion factor to determine the number of gallons of fuel used.

Eligible items shall be as listed in the table above taken from the 2007 New Jersey Department of Transportation Standard Specifications for Road and Bridge Construction Section 160 – Price Adjustments or as per the latest version thereof from New Jersey Department of Transportation.

4. Fuel Price Adjustment Calculation

The fuel price adjustment shall be calculated in accordance with the formula and relevant instructions published in the most recent edition of the New Jersey Department of Transportation Standard Specifications for Road and Bridge Construction as revised by the "Standard Inputs" periodically issued by the Department of Transportation.

The Owner will calculate the fuel price adjustment on a monthly basis using the following formula:

$F = (MF - BF) \times G$

Where:

F = Fuel Price Adjustment

MF = Monthly Fuel Price Index

BF = Basic Fuel Price Index

G = Gallons of Fuel Eligible for Price Adjustment

Fuel that is eligible for a fuel price adjustment shall be the sum of the quantities of the eligible pay items in the contract times the fuel usage factors as listed in the table above.

The Owner will utilize the Monthly Fuel Price Index which is posted every month on the New Jersey Department of Transportation's website.

http://www.state.nj.us/transportation/business/trnsport/PriceIndex.shtm

The basic fuel price index is the previous month's fuel price index before receipt of bids. The Owner will use the fuel price index for the month before the regular monthly estimate cut-off date as the Monthly Fuel Price Index.

Fuel price adjustments shall not be made in those months for which the monthly fuel price index has changed by less than five percent from the basic fuel price.

If the Monthly Fuel Price Index increases by 50 percent or more over the Basic Fuel Price Index, do not perform any work involving Items listed in the table above without written approval from the Engineer.

5. Measurement and Payment

An allowance amount of five thousand dollars ($5,000) has been determined for this Item, and is included in the Bid pages. The allowance item shall be added with the other items to determine the total base bid. The allowance is only for the fuel price adjustment of items listed in the table above applicable to work being performed under the Contract. The Contractor, Owner and

Engineer shall agree on the items in the table above to be utilized in the Contract prior to the start of construction.

Payment shall be on a monthly basis for the lump sum price calculated in Section 4, above. All invoices for payment shall be accompanied by the calculation of any fuel price adjustment and a showing of the current month's Fuel Price Index and the Basic Fuel Price Index established at the time of Bid.

Payment for the difference between the actual total cost and the contract allowance will be made through the final quantities change order with either a reduction in cost to the contract (if actual cost is less than the allowance amount) or an addition to the contract price (if the actual cost exceeds the allowance amount).

PART 2: PRODUCTS

Not Used

PART 3: WORK INCLUDED

Not Used

* * * * *

SECTION 1080

PROJECT MEETINGS

PART 1: GENERAL

1.01 PRECONSTRUCTION CONFERENCES

The Contractor shall refer to Information for Bidders, paragraph "Preconstruction and Construction Conferences" for information regarding preconstruction conferences.

1.02 JOB MEETINGS

The Engineer may schedule regular job meetings at least monthly during the life of the Contract. The time and location of meetings is to be set by the Engineer. The Contractor, unless otherwise notified by the Engineer, is to have authorized representatives attend each meeting. Additional meetings may be called as progress of work on the project requires.

The purpose of these meetings is for maintaining communication between the Owner, Engineer and Contractor, including the Contractor's subcontractors and suppliers. The meetings are to be used to coordinate various parts of the work, update construction schedules, prepare progress estimates and respond to questions which may be raised by the various participants.

The Engineer will preside over the job meetings and will be responsible for recording minutes of the meetings. The Engineer will distribute minutes of the meetings to meeting participants.

Attendants at job meetings shall include the Owner, Engineer and his subconsultants, the Contractor and subcontractors (as may be required or specifically requested by the Owner/Engineer).

Meeting agendas shall be established by the Engineer and shall include the following general items:

a. Review/approve minutes of prior meeting;
b. Review work completed since the prior meeting;
c. Review compliance with construction and shop drawing submittal schedules;
d. Identify problem areas of the construction and shop drawing submission schedules and develop responses to resolve the problems;
e. Establish detailed short-term construction schedule to identify work to be completed prior to the next job meeting;

f. Identify special plant shut-downs or Owner interaction required to complete the planned work;
g. Review construction site procedures and safety measures;
h. Establish date(s) for upcoming meetings and special agenda items;
i. Establish start-up and testing procedures for new treatment systems.

PART 2: PRODUCTS

Not Used

PART 3: EXECUTION

Not Used

* * * * *

SECTION 1090

SUBMITTALS

PART 1: GENERAL

1.01 WORK INCLUDED

This section covers a variety of different types of documents, drawings, and material which the Contractor is to provide to the Engineer or Owner for his approval, information, or use. Submittals will include, but not be limited to: bonds, bid price breakdown, construction schedule, shop drawing schedule, shop drawings, samples, color charts, operating and maintenance manuals, parts lists, spare parts and materials, special tools, and guarantees.

These items are to be submitted as specified in this Division and other Divisions of the Specifications, in the proper quantities, and in a timely manner.

1.02 SUBMITTALS

A) Shop, Coordination, Setting and Installation Drawings and Samples

The Contractor shall promptly submit to the Engineer, one (1) reproducible and seven (7) copies of detailed shop drawings, guaranteed test curves, and manufacturer's specifications for all equipment, tools and furnishings to be supplied under this Contract. Detailed shop drawings shall be submitted for items such as piping, ducts, miscellaneous metals, reinforced plastics, structural steel, reinforcing steel, mechanical equipment, fabricated items, electrical components, instrumentation and other work, whether or not mentioned in this section.

The Contractor shall submit these data with such promptness as to avoid delay in the work. Shop drawings submitted shall be scheduled in accordance with the overall project construction schedule. Items requiring long lead times and extensive review time shall be submitted first. In order for the Contractor to be deemed to have fulfilled this requirement, his individual submissions must be complete in every respect so that a logical and orderly review might follow. Piecemeal submissions are not acceptable. Final submissions for approval must be complete in all respects.

When dimensions are of particular importance, the drawing must be certified by the manufacturer as correct for this project.

The Engineer will review submitted data within a reasonable time after receipt of such data considering the complexity and completeness of such submissions. He shall determine at his sole discretion whether the data submitted are sufficient to render a decision. Resubmission of drawings by the Contractor for the Engineer's approval must be completed within thirty (30) days of the return of the previous submission by the Engineer, unless the Engineer specifically agrees to the contrary.

No materials, equipment or specialties are to be purchased, fabricated or released until the Engineer has approved the shop or working drawings as conforming to the contract requirements. All materials and work involved in the construction shall then be as represented by such drawings.

Shop drawings are to be not smaller in size than 8-½" x 11" nor larger than 30" x 42". Reproductions of the Engineer's drawings will not be acceptable as shop drawings. Before submitting shop drawings, the Contractor must check and sign all drawings, noting thereon any deviation from the Contract Drawings and Specifications.

One (1) reproducible and seven (7) copies of shop drawings, test curves, or other material are to be submitted for approval. Following his review, the Engineer will return two (2) copies to the Contractor. If shop drawings are checked "Amend and Resubmit" by the Engineer, the Contractor must resubmit one (1) reproducible and six (6) copies of the revised shop drawings, of which two (2) will be returned to the Contractor by the Engineer.

The Contractor is to be responsible for furnishing subcontractors with approved shop drawings as required. No shop drawings are to be used for construction, ordering, fabrication, or other reasons unless marked "No Exceptions Taken" or "Make Corrections Noted" by the Engineer. Should the Contractor desire more than two (2) copies of approved shop drawings, he is to submit one (1) additional reproducible drawing, identical to that approved by the Engineer, to the Engineer. The Engineer will then mark this additional reproducible drawing and return it to the Contractor for his use.

The Contractor is to note the difference in action expected by the Engineer with regard to Engineer required drawings such as shop, coordination and installation drawings, and those which are presented by the Contractor, by his own choice, and for his convenience. Engineer required drawings are to be construed as those which define shop systems work, parts drawings, fabrication drawings, test reports, certifications, and manufacturer's installation requirements. These will be reviewed and stamped appropriately by the Engineer after detailed review.

Contractor's coordination and/or installation drawings which are presented at his option are to be construed as those which assist the Contractor in his orderly execution of the work. Such drawings will be reviewed by the Engineer only as a convenience afforded the Contractor and shall not be stamped by the Engineer.

All Engineer required drawings are to be stamped by the Contractor certifying his review and approval thereof. The stamp is to bear the following information:

APPROVED FOR CONTRACT REQUIREMENTS

The Contractor's signature below indicates that he has checked the drawing with the Contract Drawings and Specifications and found it to meet all requirements of same including dimensions, and that the Contractor's guarantee fully applies to the specified material or equipment.

RE: Specification Section _____Page No.__ Paragraph No. _____

Drawing Sheet _____By:_____
Signature/Contractor

Approval of any shop drawings, manufacturer's specifications, or other material by the Engineer does not relieve the Contractor of the responsibility for:

a) Errors of any sort in shop or setting drawings or schedules.

b) Deviations from Contract Drawings or Specifications unless the Contractor has given written notice to the Engineer of any such deviations at the time of submission.

c) Responsibility for proper performance of his work.

d) Coordination with other trades.

e) Safety and security on the job site.

Data must include dimensions, detailed drawings, and manufacturer's specifications for all items. Specific data required are set forth under the various Specifications items, but in general, are to include characteristics and efficiency curves for all motors and pumps, as well as weights of equipment to be delivered.

When required by the specifications, the Contractor is to furnish duplicate samples of materials, finishes or other items proposed to be used in the work. All materials, finishes and workmanship incorporated in the work are to be similar and equal to the approved samples. The Engineer shall retain such samples until final acceptance of the project and return only those samples specifically requested.

The Contractor is to prepare and submit to the Engineer for approval, a schedule fixing the respective dates for the submission of shop or setting drawings; the beginning of manufacture, testing and installation of materials, supplies and equipment; and the completion of the various parts of the work. Such schedules will be subject to change from time to time in accordance with the progress of the work. Major emphasis will be placed on the submission of the shop drawing schedule which is to include submittal dates, time of starting manufacture, time of testing at place of manufacture where applicable, and date of delivery.

B) Payment Schedule and Cost Breakdown

Prior to contract signing, the Contractor is to have submitted and received approval on a cost breakdown which may be used in preparing the monthly requisition for payment. The breakdown is to be in sufficient detail to facilitate a meaningful and fair estimate of work in place as evaluated by the Engineer. Any unrealistic breakdown of work which is anticipated early in the construction period may be cause for rejection of the breakdown and require resubmittal prior to contract signing.

The cost breakdown is to define costs associated with individual subcontracts by key elements.

PART 2: PRODUCTS

NOT USED

PART 3: EXECUTION

3.01 RECORD DRAWINGS

The Owner shall be responsible for the preparation of all record drawings required. This responsibility may be delegated to the Engineer. The Contractor shall assist the Owner/Engineer by providing record information during the progress of the work.

The Contractor is to keep accurate records of all deviations of his work from that shown on the Drawings, and indicate the actual construction with colored lines on a set of white drawings.

During the course of construction, the Engineer reserves the right to examine the Contractor's record drawings to ascertain whether adequate effort is being afforded to the record drawings.

Prior to Final Payment Application, Contractor shall provide all field as-built records including but not limited to the site/civil drawings, process drawings, structural drawings, architectural drawings, building mechanical drawings (HVAC, plumbing, fire protection), electrical drawings including electrical wire diagrams, SCADA programming and all applicable information as necessary. The Contractor's failure to properly maintain accurate record drawings may result, at the option of the Owner, in sufficient monies being retained from the Contractor's progress pay estimates to cover the costs of maintaining proper records.

After completion of the project, the Contractor is to turn over to the Engineer one (l) set of white drawings indicating thereon a complete record of any changes or revisions which exist in the completed work. These drawings are to be used to assist and supplement the Engineer in his preparation of "Record Drawings".

* * * * *

SECTION 1100

QUALITY CONTROL

PART 1: GENERAL

1.01 CONFORMANCE TO DRAWINGS AND SPECIFICATIONS

All work is to conform during its progress and upon its completion truly to the lines, levels and grades indicated on the Drawings or given by the Engineer and is to be built in a thoroughly substantial and workmanlike manner, in accordance with the Drawings, Specifications and directions given from time to time by him. In no case will any work in excess of Drawing requirements and Specifications be paid for, unless ordered in writing by said Engineer.

1.02 LINES, GRADES AND MEASUREMENTS

The controlling bench marks and field ties as shown on the drawings are to be used by the Contractor, who is to provide at his own expense such stakes, batter boards, forms, materials and labor as may be required. Additional batter boards, lines, grades and forms may be furnished and set by the Contractor if so desired.

The Contractor is to adequately protect all monuments, stakes and marks set by the Engineer. If they are disturbed or obliterated during the progress of the work, or otherwise they will be replaced by the Engineer at the Contractor's expense. After the Contractor has erected batter boards or forms, and set elevations for the structures, the Engineer is to be afforded the opportunity to check such work for alignment, grade and location of steel, piping or equipment.

1.03 DIMENSIONS OF EXISTING STRUCTURES

The Contractor is to verify in the field, the dimensions and locations of existing structures, where an error or incomplete information relative to the location or dimension of existing structures would affect the construction to be done under this Contract. The Contractor is to verify such dimensions and locations before continuing with the construction work to the point where it would be affected.

1.04 DATUM

All elevations shown on the Drawings or used in the Specifications are expressed in New Jersey State Plane NAD 83 (horizontal) or NAVD 88 datum (vertical), unless otherwise noted.

1.05 STANDARD SPECIFICATIONS

All standard specifications referred to herein, such as NJDOT, ANSI, ASTM, AWWA, and the like, unless otherwise noted are to be the latest revision thereof, at the time of bidding.

1.06 SERVICES OF TESTING LABORATORIES AND SPECIAL CONSULTANTS

The Owner may retain and, except as otherwise specified, pay for the services of an independent testing laboratory to do such sampling and to make such tests as the Owner or Engineer may deem necessary to verify that the materials and equipment proposed for or incorporated into the work conform to the requirements of the Contract Documents. Payment for such testing will be provided in the Article of the contract entitled, "Examination of Work and Testing".

PART 2: PRODUCTS - Not Used

PART 3: EXECUTION

3.01 WATERTIGHTNESS

The attention of the Contractor is called to the specific requirements of this Contract whereby the most rigid supervision will be required to insure an absolute minimum of leakage or infiltration in the case of liquid conveying or liquid containing structures.

In general, all structures and all pipe and appurtenant structures are to be of watertight construction. Any leakage is to be repaired in accordance with the appropriate sections of the Specifications.

The Contractor is to provide, maintain and operate suitable and adequate dewatering equipment to insure satisfactory construction and maximum progress.

In certain instances dewatering permits may be required by regulatory agencies. The Owner shall obtain such permits from the New Jersey Department of Environmental Protection.

3.02 CLEAN-UP

During the course of construction all efforts must be made to maintain a neat and orderly project. Clean-up is to be pursued on a regular basis and in conjunction with the construction. The Contractor is to be responsible for clean-up during the life of this Contract with the full cooperation of all subcontractors. Upon completion of all construction, final clean-up is to include removal of all excess materials, equipment, backfill, etc., and the site is to be restored to a condition equal to or better than that existing prior to construction. Should the Contractor fail to remove such material, equipment and supplies, the Owner has the right to remove them at the expense of the Contractor.

At the completion of construction, the Contractor must tear down and remove all temporary structures unless expressly directed otherwise, and remove remaining rubbish of all kinds from all Contract structures, and from the site occupied during the progress of the work. The Contractor is to remove all concrete and ballast droppings and leave the site and the adjacent property that may have been affected by his operations in a neat and satisfactory condition. All structures and parts thereof constructed by the Contractor are to be thoroughly cleaned and left in first-class condition.

* * * * *

SECTION 1110

CONSTRUCTION FACILITIES AND TEMPORARY UTILITIES

PART 1: GENERAL

1.01 MAINTENANCE OF STRUCTURES, UTILITIES, AND NATURAL OR MAN-MADE SURROUNDINGS

All existing utilities and/or process systems are to be kept in operation at all times during construction operations unless prior arrangements have been made to provide alternative service.

From the commencement of work, the Contractor is to be solely responsible for the care of the work during its progress for materials delivered and intended to be used, and for the protection to existing structures and trees or shrubs on or adjacent to the site of the work. Any injury or damage to the same is to be made good at the Contractor's expense.

If any bypassing or disruption to plant operations inadvertently occurs or is anticipated, the Contractor shall immediately notify the Engineer, Owner, and NJDEP.

1.02 OCCUPYING PRIVATE LAND

The Contractor is not to enter or occupy with workers, tools, materials, or equipment, any land outside the easements or property of the Owner, unless written consent from said private property owner has been given to the Contractor and a copy of the consent provided to the Owner beforehand.

1.03 EXISTING CONSTRUCTION AND FACILITIES

When new construction is adjacent to or crosses streets or utilities under the jurisdiction of State, County, City or other public agency, public utility or private entity, the Contractor must secure written permission from the proper authority before executing such new construction. A copy of this written permission must be filed with the Owner before any work is done. The Contractor is to replace or repair all existing construction damaged in the execution of this contract. The Contractor will be required to furnish a release from the proper authority before final acceptance of the work.

1.04 PUBLIC CONVENIENCE

The Contractor is at all times to conduct his work so as to insure the least possible obstruction to traffic and inconvenience to the general public and residents in the vicinity of the work, and to insure the protection of persons and property. No road or street is to be closed to the public except with the permission of the proper authorities.

Fire hydrants on or adjacent to the work are to be kept accessible to fire-fighting equipment at all times. Temporary provisions are to be made by the Contractor to insure the use of sidewalks and the proper functioning of all gutters, sewer inlets, drainage ditches, and irrigation ditches, which are not to be obstructed.

The Contractor is solely responsible for satisfactorily maintaining flows in the existing utilities, affected by the work, at all times during the course of construction, unless otherwise indicated in the Contract Documents. All costs for such maintenance is deemed to be included under the price bid and no additional costs are to be paid by the Owner for any work involved in this maintenance.

The Contractor is to review his construction schedule with the Township Engineer and the Police Department with respect to interruption of traffic and revise it accordingly if the Township Engineer or the Police Department so requires.

1.05 TEMPORARY UTILITIES

The Contractor is to make all necessary arrangements for temporary utilities required or herein specified. No specific payment will be made for the costs of such utilities, but the costs thereof are to be included in the lump sum price bid for the work. Upon completion of the work, the temporary utilities are to be removed.

a) Telephone: The Contractor is to provide a job site telephone or use public pay phones at no charge to the Owner.

b) Electric: The Contractor shall provide temporary electricity for himself and his subcontractors.

c) Water: The Contractor may be allowed to use City water for temporary water required during construction. The Contractor shall obtain written permission from the Owner for use of any hydrants for this project, prior to their use. (A copy of this letter shall be sent to the Engineer.) The cost of temporary utilities is to be borne by the Contractor and included in the various unit prices bid.

PART 2: PRODUCTS - Not Used

PART 3: EXECUTION - Not used

* * * * *

SECTION 1120

MATERIAL AND EQUIPMENT

PART 1: GENERAL

1.01 CONSTRUCTION EQUIPMENT

Bidders are to familiarize themselves thoroughly with the type and nature of the equipment required in the proper execution of the work, and are to use and employ only first-class equipment. Previously used equipment must be in safe, first-class working order and condition. Sufficient equipment must be furnished and used by the contractor to permit the completion of the work within the time specified. The equipment used on any portion of the work is to be such that no injury or damage to the streets, adjacent property, or utilities will result from its use.

PART 2: PRODUCTS

2.01 MATERIALS

Unless otherwise indicated on the Drawings or specified, only new materials are to be incorporated into the work. All materials furnished by the Contractor to be incorporated into the work may be subjected to the inspection and approval of the Engineer. No material is to be processed, fabricated, or delivered to the work without the prior approval of the Engineer, except at the risk of the Contractor.

As soon as possible after the Contract has been executed, the Contractor is to submit, to the Engineer, data relating to materials he proposes to furnish for the work. Such data are to be in sufficient detail to enable the Engineer to identify the particular product in question and to form an opinion as to its conformity to the Contract requirements.

Facilities and labor for the handling and inspection of all materials are to be furnished by the Contractor. Defective materials must immediately be removed from the site of the work.

If the Engineer so requires, either prior to beginning, or during the progress of the work, the Contractor is to submit samples of materials for such specific tests as may be necessary to demonstrate that the materials conform to the Specifications. Such samples are to be furnished, taken, stored, packed, and shipped as directed, at the expense of the Contractor. Except as otherwise noted, the Owner will make arrangements for and pay for tests.

All samples are to be packed so as to reach their destination in good condition and are to be so labeled as to indicate the materials represented, the name of the building or work and location for which the material is intended, and the name of the Contractor submitting the sample. To ensure consideration of samples, the Contractor is to notify the Engineer by letter that the samples have been shipped and is to properly describe the

samples in the letter. In no case is the letter of notification to be enclosed with the samples.

The Contractor is to submit data and samples, or place his orders, sufficiently early to permit consideration, inspection, testing, and approval before the materials are necessary for incorporation in the work. Any delay resulting from his failure to do so is not to be used as the basis of a claim against the Owner or the Engineer.

When required, the Contractor is to furnish to the Engineer, in quadruplicate, sworn copies of manufacturer's shop or mill tests, or reports from independent testing laboratories relative to material data.

In accordance with the "Buy American" provision in Public Law 95-217 (Section 215 of the Public Law 92-500 as amended) and implementing EPA regulations and guidelines, N.J. Public Contracts Law 40A:11-18, and the Contractor agrees that preference will be given to domestic construction material by the Contractor, subcontractor, material suppliers, and equipment suppliers in the performance of this contract.

The Contractor is to certify that the purchased products and materials are in accordance with the above referenced "Buy American" clause and, in addition, is to provide all information required to justify the use of any foreign made product.

PART 3: EXECUTION

3.01 CUTTING AND PATCHING

The Contractor is to do all necessary cutting and patching of the work that may be required to properly receive the work of the various trades or as may be required by the Drawings and Specifications to complete the structures. He is to restore all such cut or patched work to a condition which receives the approval of the Engineer. Cutting of structures that may endanger the work, adjacent property, workers or the public is not to be done.

3.02 DELIVERY AND STORAGE

The Contractor is to deliver equipment and materials to the site and store them in original containers suitably sheltered from the elements, but readily accessible for inspection until installed. He is to store all items subject to moisture damage (such as controls and electrical equipment) in dry, heated spaces. All excavated materials, construction equipment and materials to be incorporated in the new work are to be so placed as not to damage the work and so placed that free access may be had at any time to all parts of the work and to all public utility installations in the vicinity of the work. If insufficient area is available, the Contractor is to provide off-site areas at his own expense. Materials are to be kept neatly piled and compacted and conveniently stored so as to inconvenience, as little as possible, public travel and adjoining tenants.

3.03 SERVICE OF MANUFACTURER'S REPRESENTATIVES

The Contractor is to provide the services of a skilled and experienced representative of each manufacturer supplying equipment under this Contract, for such periods as, are satisfactory to the Engineer, are essential for the proper and satisfactory installation and testing of the equipment, and training of the Owner's personnel in its use. In certain instances, particular specification sections may indicate the minimum number of visits and/or hours required to comply with the intent of the specifications regarding services of manufacturer's representatives.

3.04 MATERIALS AND EQUIPMENT TO SUIT DESIGN

The Contractor is to be responsible for insuring that all materials and equipment furnished by him fit the spaces provided in the construction. He is to make all necessary field measurements and is to order only those materials and equipment which can be accommodated in the spaces provided.

Where materials or equipment are approved which occupy more or less space than is shown on the Drawing or is available, and which require different arrangements from those shown on the Drawings, or which require any modifications of the structures or other equipment or connections, the Contractor is to install the equipment so as to operate properly and in harmony with the intended design and is to provide all labor, materials and equipment necessitated by such rearrangements or modifications at his own expense. Should any such changes cause the Owner to incur redesign costs, the actual redesign costs for said changes are to be deducted from the total contract amount due the Contractor.

Except as noted above, materials and equipment which do not conform to the requirements of the Contract Documents; do not fit the space requirements and arrangements shown; are not equal to samples reviewed by the Engineer, or are in any way unsatisfactory or unsuited to the purpose for which they are intended, are not to be furnished nor installed by the Contractor and will not be paid for by the Owner.

For the purpose of avoiding conflicts with other trades and adjoining work, where more than one article, device, product, material, fixture, form or type of construction is referred to by proprietary name, manufacturer, make or catalog number, the FIRST NAMED has generally been used as the basis of design and detail.

Any and all additional costs to other trades resulting from the installation of any equipment other than the FIRST NAMED, including equivalents and substitutions, are to be paid for by the Contractor without any additional compensation whatsoever.

It is also the responsibility of the Contractor requesting the use of equivalent or substitutions material and equipment other than that specified for the basic design to verify that it meets all indicated space requirements.

3.05 GENERAL MECHANICAL DESIGN

All equipment is to be adequately designed for the work to be done and the loads to be sustained, and is to be proportioned for ample stability and rigidity. Design is to be neat and is to provide necessary clearances for erection, repairs and adjustment. Best modern practice is to be followed in all respects.

Design of similar units is to be such that they present a uniform appearance and be similar in operation. Fittings and fixtures on the units are to be of the same make wherever possible. Parts are to be interchangeable wherever feasible.

3.06 HOUSINGS AND GUARDS (Not in Contract)

3.07 GREASE FITTINGS (Not in Contract)

3.08 TEMPLATES AND FOUNDATION BOLTS (Not in Contract)

* * * * *

SECTION 1130

SPECIAL CONDITIONS

PART 1: GENERAL

1.01 WORK INCLUDED

The Contractor is to review the Drawings and Specifications to determine the extent of the work. The Contractor is specifically alerted to this section concerning inspection of the existing field conditions. The Contractor is to visit and inspect the project prior to preparing his bid in order to clearly familiarize himself with all field conditions, the intent of the design, and the extent of all work. After his review and inspection is complete, and before he submits his bid, if the Contractor has any questions regarding the extent and details of the work, he is to submit them to the Engineer in writing.

Before proceeding with any work, the Contractor is to confirm methods of construction, obtain field measurements, and verify all dimensions on the Drawings as required.

Failure of the Contractor to familiarize himself with all drawings relating to the work and conditions existing at the site of construction will not relieve him of his obligation to furnish all material and labor necessary to carry out the provisions of the Contract Documents and to complete the contemplated work for the consideration set forth in his bid.

The Contractor is cautioned that existing utilities are to be kept in operation during the period of the Contract.

The Contractor is alerted to the fact that the Owner assumes no responsibility for actual conditions of the areas affected by work indicated or called for by the Contract Documents.

1.02 CONSTRUCTION SEQUENCE

The Contractor shall undertake work under this Contract only in accordance with the following sequence of construction activities. This sequence may be modified from time to time by the Engineer and Owner, but the Contractor shall not depart from the sequence indicated below without prior written permission from the Engineer or Owner to do so. Construction sequence follows below:

1. Establish an area for delivery, storage and staging of construction equipment and material.

2. Install soil erosion and sediment control devices as required along the pipe alignment as shown on the Contract Documents.

3. Traffic control on all local roads must be coordinated with the municipal Police Department.

4. Perform tie-in connection work to the existing water main during a series of scheduled 4-hour shutdowns with the Authority. Interior surfaces of new pipe spool pieces shall be cleaned and swabbed with a 1% hypochlorite disinfecting solution. Tie-ins shall be completed with enough piping to minimize any future work in Twin Rivers Drive.

5. Excavate, install new water main with fire hydrants and backfill. As the new water main is installed, the existing water main is to remain in service.

6. The new water main is to be flushed, pressure tested, chlorinated and dechlorinated.

7. Transfer existing water services to the new water main. Install new curb stops and curb boxes. Existing curb stop to remain in open position and existing curb box removed.

8. Perform remaining tie-in connection work (which could not be completed at the beginning of the project) to the existing water main during a series of scheduled 4-hour shutdowns with the Authority. Interior surfaces of new pipe spool pieces shall be cleaned and swabbed with a 1% hypochlorite disinfecting solution. Tie-ins shall be completed with enough piping so that no additional work will need to be performed in Twin Rivers Drive other than cutting of existing piping for abandonment at the end of the project.

9. Abandon existing water main and valves.

10. Remove existing fire hydrants and existing hydrant valve boxes.

11. Remove soil erosion and sediment control devices after temporary pavement is complete.

12. Place permanent pavement at times designated in the specifications.

13. Restore staging and storage areas.

1.03 ASBESTOS-CONTAINING MATERIAL AND HAZARDOUS MATERIAL

The Contractor shall not supply, provide or bring onto the construction site any asbestos containing material (ACM) or hazardous material (either in kind, as a component of equipment to be used or furnished under the Contract, or as a component of another material to be used or furnished under the Contract) without the express advance, written consent of the Owner. The term, "hazardous material" shall have the meaning ascribed in Federal Standard No. 313B in effect on the date of the Contract.

The Contractor shall submit to the Owner (with a copy to the Engineer) a Material Safety Data Sheet (Department of Labor Form OSHA-20) together with a complete written description of the intended usage for any such material for which the Owner's consent is required, at least thirty (30) days before the delivery of such material.

Such consent shall not be given if materials or equipment not containing asbestos or hazardous material are available, and the Contractor shall not be entitled to any adjustment in time or compensation for providing non-asbestos-containing and non-hazardous materials.

PART 2: PRODUCTS

Not Used

PART 3: EXECUTION

Not Used

* * * * *

SECTION 01576

POLICING AND TRAFFIC CONTROL

PART 1: GENERAL

1.01 SCOPE OF WORK

A. The Contractor must arrange with the East Windsor Township for Police Officers to direct traffic within the location of work under this Contract. Police or uniformed traffic control directors will be required whenever work is conducted within a roadway or whenever traffic flow is restricted or detoured. The Contractor is responsible for coordinating and scheduling his work with the police department.

B. The intent is to insure public safety by proper direction of traffic. Police are not to serve as watchmen to protect the Contractor's equipment and materials, or to warn pedestrians of such hazards as open manholes.

C. Nothing contained herein shall be construed as relieving the Contractor of any of his/her responsibilities for protection of persons and property under the terms of the Contract.

D. All payments to police under this Contract shall be in accordance with the General Laws of the State of New Jersey. The Contractor shall make all payments, including administrative fees, directly to the East Windsor Township Police Department.

1.02 TRAFFIC CONTROL SUBMITTALS

A. Traffic Control Plans shall be prepared by the Contractor for each worksite, and all worksites shall be included in a single submission. They shall be approved by the Police and submitted to the Engineer for a review and approval. Engineers review and approval is required before the Contractor may apply for street occupancy permits.

PART 2: PRODUCTS

Not in contract

PART 3: EXECUTION

Not in contract

END OF SECTION

SECTION 02010

SUBSURFACE EXPLORATION

PART 1: GENERAL

1.01 WORK INCLUDED

Under this section, the Contractor is to furnish all labor, equipment and materials required for borings, test trenches and test pits as required for the proper completion of the work under this Contract.

1.02 RELATED WORK

Section 2105 – Environmental Protection
Section 2140 - Dewatering
Section 2200 - Earthwork

1.03 EXISTING INFORMATION

Information regarding existing subsurface conditions within the limits of the project site is presented merely for the convenience of the Contractor. The Owner and Engineer do not represent that the information on underlying strata, water levels, structures or utilities accurately indicate the conditions at the site at the time the work will be undertaken. The Contractor shall realize that the underlying strata that the Owner has shown for any given boring is indicative only of the underlying strata found at that specific location.

The Contractor shall conduct further subsurface investigations as he may deem necessary and shall rely solely on his own interpretation of his own investigations.

PART 2: PRODUCTS

2.01 MATERIALS AND EQUIPMENT

The Contractor shall furnish the necessary materials and equipment required by this Section.

PART 3: EXECUTION

3.01 GENERAL

The Contractor is to excavate such test trenches and test pits as may be required to locate existing subsurface structures, utilities or strata. Such test areas are

to be of adequate depth and size to provide the required information. Such areas are to be dewatered, if necessary.

The Contractor is advised that the site may have some areas where underground pipes, conduits or structures may exist. Such pipes, conduits or structures may or may not be in active use. In certain instances, they may not even be in the approximate location horizontally or vertically indicated. Every reasonable attempt has been made to indicate the most accurate location of such possible underground interferences.

The Contractor must exercise caution in his work in order to prevent damage to such unknown structures, wells or utilities. Where such structures, utilities, or wells are in active use and become damaged, every effort must be made to restore them to service, as rapidly as possible.

The Contractor shall undertake sufficient subsurface exploration to determine potential interferences sufficiently in advance of his operations so as not to cause undue delay in the normal sequence or productivity of his work.

* * * * *

SECTION 02105

ENVIRONMENTAL PROTECTION

PART 1: GENERAL

1.01 WORK INCLUDED

Under this section, the Contractor shall furnish all labor, materials, and equipment necessary and shall take all measures necessary to preserve and protect the site and environs from environmental impact due to construction activities at the site during all phases of the project construction. Contractor is responsible to implement and maintain all temporary and permanent soil erosion and sedimentation control measures specified in the Contract Drawings. The implementation and maintenance will be ongoing before, during and after construction.

The required measures shall include, but are not necessarily limited to: providing erosion and sediment control methods and devices; confining the activities of his and his subcontractor's equipment and workmen to the designated site boundaries, except as may be required for site ingress and egress; taking effective measures to minimize and control noise due to construction operations; complying with all municipal, State and Federal regulations regarding open burning, air pollution control and water pollution control; disposing of all surplus, unusable and unsuitable excavated material, brush, trees, debris and rubbish to off site locations; providing sanitary facilities in sufficient numbers for all workmen and visitors to the site, including the Owner, the Engineer, their representatives and representatives of all agencies authorized to visit the site; protection of all surface and groundwaters at the site and in proximity to the site; and all else as described hereinafter and as required to fulfill the intent of this section of the specifications.

1.02 RELATED WORK

Section 2010 - Subsurface Exploration
Section 2140 - Dewatering
Section 2200 - Earthwork

PART 2: PRODUCTS

2.01 MATERIALS - GENERAL

All materials, structures, and devices used by the Contractor shall fully comply with the applicable requirements of the standards for Soil Erosion and Sediment Control in New Jersey, and all other applicable federal, state and local requirements.

PART 3: EXECUTION

3.01 EROSION AND SEDIMENT CONTROL

At a minimum, the Contractor shall incorporate the following erosion and sedimentation control measures:

1. All erosion and sedimentation control measures shall be in place prior to any grading operations or construction of proposed facilities and shall be maintained until construction is complete and the construction area is stabilized. After restoration is complete, temporary control measures shall be removed and disposed of properly.

2. All erosion and sedimentation control measures shall be constructed and maintained in accordance with the "Standards for Soil Erosion and Sediment Control in New Jersey", prepared by the New Jersey State Soil Conservation Committee, 2012, incorporated herin by regerence as amended and supplemented. Copies of the "Standards for Soil Erosion and Sediment Control in New Jersey" are available for a fee from the New Jersey Department of Agriculture, Soil Conservation Committee, or from the office of any of the 16 local conservation districts.

3. Disturbed areas that will be exposed in excess of 14 days shall be temporarily seeded and/or mulched until proper weather conditions exist for establishment of a permanent vegetative cover except in areas where final restoration is expected to be completed within seven days after the completion of construction, in which case no temporary protective measures will be required. If final restoration is expected to begin more than seven days and completed more than 30 days after the start of construction, seeding shall be required for temporary protection, except where seasonal conditions are not suitable for growing vegetation. In this case, mulch may be applied until conditions are suitable for establishing vegetative cover or until final restoration is implemented.

Before commencing any construction activities, exclusive of clearing and grubbing, the Contractor shall first provide ditching, construct temporary sediment barriers and grade the construction area so as to completely prohibit any excavated or fill soils, silts and other materials resulting from construction operations from being carried off and away from the construction area thence into streams or the storm sewer systems. No other excavation work shall be permitted and no fill shall be brought onto the site until the Contractor has completed works for controlling soil erosion and sediment control.

When ordered by the Owner or Engineer, all existing temporary work as specified in the preceding paragraph shall be removed and the site restored and brought to the specified finish conditions.

All temporary disposal sites and stockpile areas shall be so located so as to prohibit runoff of silt and soil to any watercourses or natural drainage channels.

All site clearing shall be done in such a manner to provide minimum exposure of soils wherever possible.

The Contractor shall provide mulching and shall take other protective measures as required to protect disturbed and new soils from erosion.

3.02 PROTECTION OF TREES AND VEGETATION

The Contractor shall make every effort to avoid destruction of and damage to native trees and shrubs not designated to be removed so as not to unduly disturb the ecological or environmental quality of the area.

Straggling roots shall be pruned. Trees which must be pruned shall be cut cleanly and coated with protective tree paint. If trees are damaged, the wood shall be repaired and painted.

Trees and shrubs not to be removed shall be suitably boxed or otherwise protected.

3.03 NOISE CONTROL

The Contractor shall take effective measures to minimize noise produced by all construction operations.

The number of machines in operation at a given time shall be limited to the minimum practicable. All engine generators or pumps must have mufflers and be enclosed within a temporary structure.

3.04 AIR AND WATER POLLUTION AND SOLID WASTE CONTROL

The Contractor shall make himself aware of and shall comply with all current local, State and Federal regulations governing air and water pollution control and solid waste control, including especially, regulations prohibiting open burning of trees, logs, stumps, brush, vegetation, wood chips or construction debris. In no case shall any brush, vegetation or construction debris be buried on site. All such materials shall be removed and disposed of at off-site locations.

3.05 PROHIBITED CONSTRUCTION ACTIVITIES

The Contractor shall refrain specifically from the following construction activities, as well as others which may be elsewhere specified in this Section or other Sections of the Specifications.

1. Dumping of spoil material into any stream corridor, any wetlands, any surface waters, or at unspecified locations. Wherever in these specifications the term "stream corridor" is used, it shall mean and shall include the biophysical environment within the area carved by a natural watercourse between upland plateaus.

2. Indiscriminate, arbitrary, or capricious operation of equipment in any stream corridors, any wetlands, or any surface waters.

3. Pumping of silt-laden water from trenches or other excavations into any surface waters, any stream corridors, or any wetlands.

4. Damaging vegetation adjacent to or outside of the site boundaries.

5. Disposal of trees, brush, and other debris in any stream corridors, any wetlands, any surface waters, or at unspecified locations.

6. Permanent or unspecified alteration of the flow line of the stream.

7. Open burning of project construction or other debris.

8. Washing and clean-up of trucks and other construction vehicles in any streams, surface waters or wetlands.

9. Use of chemicals for dust control.

10. Use of asphaltic mulch binder.

3.06 SITE RESTORATION

Final restoration shall be undertaken as soon as areas are no longer needed for construction, stockpile or access. Excavated stones and boulders shall be removed from the site. Care shall be taken to avoid damage to adjacent vegetation and to prevent formation of depressions which would serve as mosquito breeding areas. All installed hay bales and other soil erosion and sediment control materials and structures shall be removed. Areas to receive permanent stabilization shall be graded and/or prepared as shown on the Contract Drawings. Unconstructed areas of the site shall be restored to their original or proposed landscaped condition.

Excavated materials unsuitable for backfill as set forth at N.J.A.C. 7:14-2.13 and considered to be solid waste pursuant to N.J.A.C. 7:26-1.6 shall be removed from the construction site and disposed of at a sanitary landfill approved and licensed by the department. Excess excavated material which is not considered to be solid waste pursuant to N.J.A.C. 7:26-1.6 shall be graded or removed in accordance with N.J.A.C. 7:22-10.11(L)3.

Topsoil shall be replaced with adequate amounts of topsoil material to restore the disturbed area to its original, pre-disturbance grade and depth of topsoil.

Rates and types of fertilization, liming, and seeding shall be as recommended by the local Soil Conservation District based on soil tests and local conditions. Seed mixtures shall be selected that are best suited for the particular site conditions. Seed selection shall provide for a quickly germinating initial growth, to prevent erosion, and for a secondary growth that will survive without continuing maintenance. Mulching shall occur immediately after seeding, and in no case shall more than five days elapse between seeding and mulching.

In wooded areas, for a 50 foot wide construction easement, generally 10 trees should be planted for every 100 feet of length of the easement. More trees would be required in wider easements or densely wooded areas. Plans shall include a restoration schedule specifying the quantity, common and botanic names, sizes, and spacing of trees to be planted and the type of seed mixtures to be used from station to station. Trees to be replaced should be trees native to New Jersey suitable for the particular site and generally should conform to the list of trees found in the "Standards for Soil Erosion and Sediment Control in New Jersey", prepared by the New Jersey State Soil Conservation Committee, 2012.

In landscaped areas, environmental features shall be replaced or restored to pre-disturbance condition or better. This includes sodding, replacement of trees and shrubs, fences, drives, and other landscape features in kind.

* * * * *

SECTION 02140

DEWATERING

PART 1: GENERAL

1.01 WORK INCLUDED

The dewatering of all areas where work must be performed under this Contract is the responsibility of the Contractor and no additional sum will be allowed for any dewatering operation, overtime, equipment rental or any other expense incurred due to the occurrence of ground water, surface water or water from possible leakage of existing buildings, structures and piping in the vicinity of the Contractor's operations.

1.02 RELATED WORK

Section 2010 - Subsurface Exploration
Section 2105 - Environmental Protection
Section 2200 - Earthwork

PART 2: PRODUCTS

2.01 MATERIALS AND EQUIPMENT

The Contractor shall furnish all materials and equipment necessary to carry out all dewatering required during construction.

PART 3: EXECUTION

At all times, the Contractor is to maintain and operate proper and adequate surface and subsurface dewatering in order to keep the construction site dry and in such condition that construction of structures and utilities and placement and compaction of fill and backfill may proceed unhindered by saturation of the area.

The Contractor is to prevent surface water and subsurface or groundwater from flooding or spilling into excavations, and from flooding the project site or surrounding area. He is to remove all water in order to prevent softening of structure or pipe foundation bottoms, undercutting footings, and soil consistency changes detrimental to the stability of subgrades and foundations. The Contractor is further to provide and maintain pumps, well points, sumps, suction and discharge lines, or other dewatering system components necessary to convey all water away from excavations.

The Contractor is to obtain, at his own cost, any permits required for construction dewatering.

When dewatering will occur in the vicinity of structures the Contractor shall monitor for adverse effects to structures or wells due to dewatering and shall be responsible to remedy same to the satisfaction of the State. Discharges from dewatering activities which contain silt or hydrogen sulfide are subject to the following controls:

1. All discharges from dewatering activities to surface waters, wetlands or storm sewers shall be free of sediments. Care shall be taken not to damage or kill vegetation by excessive watering or by damaging silt accumulation in the discharge area. If discharges are sediment laden, techniques shall be employed to remove sediment prior to discharge. A sedimentation basin shall be constructed and use as specified, where necessary, to protect vegetation and to achieve environmental objectives.

2. Sewer inlets within construction areas shall be provided with perimeter hay bales or other appropriate siltation control measures.

* * * * *

SECTION 02200

EARTHWORK

PART 1: GENERAL

1.01 WORK INCLUDED

The work includes excavation in all substances encountered and backfill for all the various structures, pipelines and utilities shown on the contract drawings. The work includes storage in temporary spoil banks, all backfilling, selection and placing of select material under pipelines and structures, and the disposal of surplus material at off-site locations.

Excavation work also includes stripping, storage and replacement of topsoil; tree and debris removal and disposal; furnishing, placing and removal of any sheeting and shoring required; the draining and pumping of all excavations, the protection of existing pipeline areas and structures to remain; compaction; grading, and the cleaning up of the site. Special foundation excavation and compaction work is also included.

Excavated material, if deemed suitable by the Engineer and as needed shall be stored for re-use as backfill.

Excess material shall be removed from the site and any permits required for the removal of material off site shall be obtained and paid for by the Contractor. The Contractor shall comply fully with any and all requirements with respect to local Ordinances concerning earth removal. Imported materials, if required, are to be provided and placed. All excavation and backfill shall be undertaken at no additional cost to the Owner.

The Owner may engage the services of a soils engineer to inspect the soils, subgrade and earthwork construction at the site. The Contractor shall cooperate in every way with the soils engineer in carrying out his tests. Testing shall be paid for by the Owner.

1.02 RELATED WORK

Section 2010 - Subsurface Exploration
Section 2105 - Environmental Protection
Section 2140 - Dewatering

1.03 REFERENCES

The Contractor shall specifically comply with OSHA Standards for Excavations (29 CFR Part 1926), "OSHA Standards". As such, the Contractor shall be responsible for providing a "competent person" as defined in the OSHA Standards and as required by the Standards. The Contractor shall be solely responsible for the selection, design, installation, and implementation of all "protective systems". The pipeline and structure designs by the Owner, the Engineer, or the Engineer's Consultant does ***not*** include the design of the "protective systems", since the design of the "protective systems" is the responsibility of the Contractor.

1.04 SUBMITTALS

A. Soil Samples

Thirty (30) pound bag samples of each material to be used as fill or backfill shall be submitted to the Engineer two weeks prior to commencing fill operations. This material shall not be used until approved by the Engineer. By submitting samples of this material, the Contractor agrees and guarantees that the material used for construction will conform with the sample(s) supplied. Final acceptance of material rests with the Engineer, whose decision shall be final and binding upon the Contractor. However, the acceptance of any material by the Engineer shall not relieve the Contractor of his responsibility to have the material used conform to the sample(s) approved by the Engineer.

B. Sheeting and Bracing

Where sheeting is used, the sheeting must be designed by a Professional Engineer licensed to practice in the State of New Jersey. Said engineer is to provide the Contractor with a certification signed and sealed by him stating that the design of the sheeting and bracing conforms to all applicable requirements of the New Jersey Construction Safety Code and the Occupational Health and Safety Act. Copies of this certification shall be submitted to the Owner's Engineer. The Contractor shall submit a complete sheeting and bracing plan, including supports and bracing for existing and proposed pipelines or structures, as designed by his chosen Professional Engineer for the sole purpose of proving that the required design has been performed. This submittal shall not be considered to be a shop drawing, and the Owner's Engineer shall have no duty to review the adequacy of the design of the sheeting or trench boxes indicated thereon.

The Contractor must follow the proposed sheeting and bracing plans originally certified to. No deviations may be made from the certified procedure without first submitting a revised sheeting and bracing plan, signed and certified as required for the original submission by the same licensed Professional Engineer who prepared the original submission.

PART 2: PRODUCTS

2.01 MATERIALS

1. NJDOT No. 57 Stone

NJDOT No. 57 stone shall be hard and durable, washed and free from fines, organic material, shale or other soft rock fragments, or other deleterious substances.

NJDOT No. 57 stone shall meet the following gradational requirements:

Sieve Size	Percentage by Weight Passing Square Mesh Sieves
1-1/2"	100%
1"	95 - 100%
½"	25 - 60%
No. 4	0 - 10%
No. 8	0 - 5%

2. Granular Fill (Type "G" Fill)

Type "G" fill shall be a clean granular soil from suitable on-site material or imported from off-site and shall meet the following gradation requirements:

Sieve Size	Percentage by Weight Passing Square Mesh Sieves
2"	100%
1"	80 - 100%
3/8"	70 - 100%
No. 10	50 - 100%
No. 30	30 - 85%
No. 60	15 - 65%
No. 200	5 - 15%

3. Quarry-Processed Stone

Quarry-processed stone shall conform to the requirements for Type I-5 dense graded aggregate material as outlined in the New Jersey State Department of Transportation Standard Specifications. This material shall be hard, durable, broken gravel so that it can be compacted into a hard dense mass. The material shall be leveled to the required grades and compacted by approved methods. The quarry-processed stone shall have the following gradation.

Sieve Size	Percentage by Weight Passing Square Mesh Sieves
1-1/2"	100%
3/4"	55 - 90%
No. 4	25 - 60%
No. 50	5 - 25%
No. 200	3 - 12%

Dense graded aggregate material other than quarry-processed stone shall not be used.

4. Structural Fill (Type "S" Fill)

Structural fill shall consist of clean sand and gravel. This fill material shall be imported from off-site and shall meet the following gradational requirements.

Sieve Size	Percentage by Weight Passing Square Mesh Sieves
1"	100
3/8"	65 - 100
No. 10	40 - 85
No. 30	20 - 65
No. 60	10 - 45
No. 200	5 - 12

5. Bank Run Sand and Gravel

Bank run sand and gravel (soil aggregate Type I-2) shall be bank run supply, free of clay and foreign material, as approved by the ENGINEER. Bank run sand and gravel shall only be used when an insufficient quantity of select excavated material is available to backfill the trench and when directed by the ENGINEER. Bank run sand and gravel (soil aggregate Type I-2) shall meet the following gradation:

Sieve Size	**Percentage by Weight Passing Square Mesh Sieves**
2"	100
3/4"	65 - 100
No. 4	40 – 75
No. 50	5 – 30
No. 200	0 - 7

6. Sand For Pipe Bedding

Sand used for pipe bedding as shown on the trench details shall meet the requirements of NJ DOT standard 901.05. Sand for pipe bedding shall meet the following gradation:

Sieve Size	**Percentage by Weight Passing Square Mesh Sieves**
3/8"	100
No. 4	95 – 100
No. 8	80 – 100
No. 200	0 - 5

2.02 PERMANENT SHEETING

NOT IN CONTRACT

PART 3: EXECUTION

3.01 STRIPPING

All topsoil and soft surface soils shall be stripped from the construction area. Topsoil stockpiles shall be kept free of tree stumps, large roots and other objectionable material. In no case shall material be stored in locations which will cause damage to existing improvements, or in environmentally sensitive areas.

3.02 DUMPING

All material such as stumps, trees, unusable excavated material, etc. shall be trucked from the site and dumped in an off-site location. Hauling and dumping costs shall be borne by the Contractor at no additional cost to the Owner. The use of coverings on trucks hauling materials in various municipalities may be required by local ordinances. However, the Contractor shall have no cause for additional claims for such a requirement. Truck wheels shall be cleaned prior to leaving the site so that no mud or other unsightly material is deposited on adjacent roadways.

3.03 GENERAL EXCAVATION, CLEARANCE AND TRIMMING

Excavations shall be of sufficient width to permit work to be done competently, in the manner and of the size specified and shown. Limits shall be such as to permit the use of outside forms, where required.

All excavations shall be made to conform with the lines of the finished structures wherever practical. Unless specifically required, excavations shall not be carried below grade by machine, and backfill used to bring foundations to the grade of bottom slabs, footing, or pipelines. Care should be taken to provide adequate drainage away from excavated areas throughout construction.

In all excavations where boulders, rock, masonry, or other similar materials are encountered these materials shall be excavated until suitable subgrade material is exposed and carefully backfilled with NJDOT No. 57 stone to the bottom of the proposed bedding.

Excavations are to be made as closely as possible to the required levels and, in general, are to be carried out in even lifts with uniform stable side slopes maintained at all times. Excavations are to be made to the required lines, which are to be of sufficient width outside the structures to give room for placing and removing forms for concrete and for forming pipe joints. Care is to be taken to avoid unnecessary disturbance or softening of the subgrade, and all subgrades are to be inspected and approved prior to pouring any concrete. Any disturbed soil below subgrade level for structures which are designed to bear directly on soil is to be removed and replaced with 2500 psi concrete. After excavation to the subgrade, the Engineer will inspect the subgrade.

Excavations made adjacent to, or in the proximity of existing or new structures and pipelines, are to be made with special care in such a manner as not to

damage the structures or pipelines, or disturb the supporting backfill and foundations of such structures and pipelines.

Particular care must be taken to brace and support existing pipelines against lateral and vertical movement, and to prevent damage due to the weight of construction equipment. The Contractor shall also be responsible for restraining all exposed piping systems.

If, during progress of excavation, ground movement or any movement of the existing or new structures is discovered, excavation is immediately to stop and adequate measures are to be taken to prevent further movement.

Storage of construction material or equipment immediately adjacent to sheeting or a top of slope shall be strictly controlled, as also shall be the use of these areas as a working platform by heavy construction equipment. Where cranes and other heavy equipment are to be located in these areas, the sheeting and bracing and slope designs are to include the effect of this equipment.

3.04 ADDITIONAL EXCAVATION

Wherever, in the opinion of the Engineer, the material found at the grades shown on the plans for foundation or pipe inverts is not satisfactory, the Contractor shall make any additional excavations when ordered by the Engineer, and shall refill the same to the required grade with additional clean stone or material as directed by Engineer, and shall roll or tamp and hand grade the same as specified herein.

3.05 UNAUTHORIZED EXCAVATION

If any excavation is caused by the Contractor's error, or wherever the excavation is carried beyond or below the lines and grade given by the Engineer, the Contractor shall, at his own expense, refill all such excavated space with such material and in such manner as may be directed, in order to insure the stability of the various structures. Beneath all structures, space excavated without authority shall be refilled with 2500 psi concrete, clean stone, or select backfill as directed by the Engineer, by the Contractor and at his own expense.

3.06 SHEETING AND BRACING

Where necessary, particularly for safety or to prevent disturbance, damage or settlement of adjacent structures, foundations, floor slabs, pipelines, utilities, improvements or paving, excavations are to be sheeted and braced. Any damage to new or existing structures or pipe lines occurring through settlement, water or earth pressure, or other causes due to inadequate bracing, or through the negligence or fault of the Contractor in any other manner, is to be repaired by the Contractor at his own expense.

The Contractor must follow the originally certified proposed sheeting and bracing plans as outlined in Paragraph 1.04 of this specification section. No deviations may be made from the certified procedure without first submitting a revised sheeting and bracing plan, signed and certified as required for the original submission by the same licensed Professional Engineer who prepared the original submission.

The sides of all excavations are to be sloped to comply with local codes and ordinances having jurisdictions. The Contractor is to shore and brace where sloping is not possible because of space restrictions or stability of material excavated. The Contractor is to maintain all sides and slopes of excavations in a safe condition until completion of backfilling.

Temporary driven steel sheeting is to be used wherever necessary to ensure that excavation side slopes do not encroach upon areas outside the limits of disturbance shown on the drawings. However, if necessary, steel sheeting shall be left in place if its removal may either damage new or existing facilities or result in soil disturbance beyond the designated limits.

If field conditions warrant the use of permanent sheeting, than the Contractor shall furnish and install permanent sheeting. This sheeting shall consist of steel soldier piles and treated timber horizontal breastboards between the soldier piles, as specified in Paragraph 2.02 of this section.

The Contractor shall certify that the treated timbers meet the noted Specifications. Soldier piles shall be installed plumb, true to line and location, and to the tip elevations shown on Contractor's submitted plans. Soldier piles may be installed by means of a pile hammer or by pre-drilling or a combination of both. Full details on the method of installation shall be submitted to the Engineer.

Breastboards shall be installed true to line and locations as shown on Contractor's submitted plans. Excavation for the installation of breastboards shall be carefully performed to minimize voids behind the timber. All voids behind breastboards are to be filled. Breastboards shall be installed as excavation proceeds and no more than 20 vertical inches of soil shall be exposed at any time.

The steel soldier piles shall be burned off and removed along with adjacent breastboards, a minimum of 2' below final grade.

All payment for furnishing, placing temporary and permanent and removing temporary sheeting and bracing or other excavation protection, such as sloped excavation sides outside the normal excavation limits, shall be included in the lump sum price bid for this project.

3.07 REMOVAL OF WATER AND PROTECTION FROM FLOODING

The Contractor shall remove all water from the excavation promptly and continuously throughout the progress of the work and shall keep the excavation dry at all times until the structures to be built therein are completed.

Precautions shall be taken to protect uncompleted work from flooding during storms or from other causes. All pipelines or structures not stable against uplift during construction or prior to completion shall be thoroughly braced or otherwise protected.

All necessary precautions shall be taken to prevent disturbance of, and to properly drain, the areas upon which concrete is to be poured, and upon which pipe is to be laid.

Contractor's plant and equipment shall be adequate to prevent differential hydraulic pressures from heaving concrete work until properly set.

3.08 DISPOSAL OF EXCAVATED MATERIAL

Excavated material which meets the gradation requirements of Type "G" fill may be stockpiled and reused as fill and backfill where Type G materials are required. Excess material and material unsuitable for reuse shall be disposed of at off-site locations.

So far as possible, the excavated material, which may be reused, may be temporarily stored on the site of the work, but it shall not be done in a manner to interfere with the satisfactory carrying out of the work, nor shall it be dumped in such a location as to cause pressures against newly placed masonry.

3.09 PROTECTION OF EXISTING STRUCTURES, PIPELINES, DRAIN AND CONDUITS AND RESTORATION

The Contractor shall carefully protect all existing structures, wells, pipelines, drains, conduits, or other improvements on the site, and shall restore same to a condition equivalent to conditions existing prior to his operations.

Ample precautions shall be taken to prevent settlement of existing improvements.

All existing pipelines shall be maintained or, where required, shall be removed to accommodate the work to be done under this contract.

3.10 PIPE TRENCH EXCAVATION AND BACKFILL

Trenches for pipelines shall be excavated to the depth and width shown on the Contract Drawings. Where excavation is made in rock or boulders, the trench shall be excavated 8 inches below the pipe barrel for pipe 12-inches in diameter or less, and 12-inches below the pipe buried for 16-inch diameter pipe and larger. All loose material shall be removed from the trench bottom.

All trenches shall be backfilled up to the original surface of the ground or up to such grades with material as designated on the Contract Drawings or as directed by the Engineer Backfill from bottom of trench up to existing grade shall be in lifts as shown on the Contract Drawings. The backfill is to be compacted near optimum moisture content by means of vibratory compactors to 95% of its established Modified Proctor Density established in accordance with ASTM Designation D1557 - Method C. Should the obtained density of the compacted fills be less than specified, the Contractor is to recompact the area until the required maximum density is reached.

Contractor may use mechanical equipment to place the backfill. This shall be done in such a manner that the material does not free falls, but shall be so placed that it will flow on to the previously placed material. No compacting of the backfill with mechanical equipment such as wheeled vehicles will be permitted.

3.11 EXCAVATION, BACKFILLING, COMPACTION AT STRUCTURES

A. Subgrade Preparation

Wherever the development of suitable foundation conditions requires, the Contractor shall take the proper means for compacting such foundation material. After excavation to subgrade, the surface shall be rolled, tamped or otherwise consolidated to adequately prepare the bottom for the loads to come upon it, the methods depending upon the quality and condition of the material. Where so required, broken stone shall be placed on the surface and shall be rolled or tamped into the subgrade in such thickness as may be required by the Engineer.

Immediately before the Contractor is to place foundations or floor slabs, the Engineer will inspect the subgrades. The Contractor is to remove any soft material and replace with properly compacted materials. The pouring of foundations or floor slabs is to commence within twenty-four (24) hours of final approval. Rain, frost and other factors which in the opinion of the Engineer are potentially damaging to the subgrades, and which occur after the final approval but before or during the pouring, will require another inspection of the subgrade by the Engineer. The Contractor is to correct any deficiencies found at this time, at his own expense.

After approval of the subgrade, a work mat of NJDOT No. 57 stone, a minimum of 12-inches thick, or as otherwise shown on the Drawings, is to be placed throughout the excavation, up to elevations of the bottom of foundations.

B. Selection, Placement And Compaction Of Backfill

Unless otherwise specified, excavations shall be backfilled up to the original surface of the ground or up to such grades as shown on the Contract Drawings or as directed. The backfilling shall be done in such a manner as to prevent after settlement around all structures and pipelines.

Only such materials as is suitable for backfill, shall be used. All backfill material placed within 4 feet of foundation walls and structures, and below structural slabs, shall be Type "S" structural fill. All other backfill may utilize suitable excavated material, or Type "G" fill where sufficient suitable excavated material is not available.

1) Placement of Backfill

The Contractor is to backfill structure excavations as promptly as the work permits, but not until the completion of the following:

a. The removal of all concrete form work.

b. Inspection by the Engineer of the construction below the finished grades including, where applicable, damp-proofing, waterproofing, and perimeter insulation.

c. Inspection, testing, approval, and recording locations of underground utilities.

d. The removal of shoring and bracing and backfilling of voids with satisfactory materials.

e. The removal of all trash and debris.

Backfill is to be spread by mechanical equipment or by manual means and is to be mixed thoroughly and spread in lifts. Backfill is to be built up in horizontal layers as nearly even as practicable to prevent the thickness of any lift from exceeding 12 inches. Backfill material should not be bulldozed into excavations or dropped directly on pipes.

2) Compaction of Backfill

The backfill is to be compacted near optimum moisture content by means of vibratory compactors to 95% of its established Modified Proctor Density established in accordance with ASTM Designation D1557-Method C. Should the obtained density of the compacted fills be less than specified, the Contractor is to recompact

the area until the required maximum density is reached. Only hand held compaction equipment is to be used within four (4') feet of retaining type foundation walls and structures, and existing structures. Fill shall be placed and compacted in lifts not exceeding 12-inches in thickness.

Compaction of fill around the deeper portions of foundation walls may be by puddling or jetting techniques, as directed by the Engineer.

Each successive lift shall not be placed or compacted until the previous lift is inspected and approved by the Engineer.

3) Moisture Content

The moisture-density curve for the backfill material used is to be employed as a guide in controlling moisture so as to achieve the required degree of compaction. When fill materials become too wet for the required compaction, they shall be dried by a method approved by the Engineer prior to commencing or continuing compaction operations. Likewise, if the fill materials become too dry for the required compaction, they are to be moistened by a method approved by the Engineer prior to commencing or continuing compaction operations. Moisture content shall be controlled to within 3% of optimum moisture content.

* * * * *

SECTION 2500

PAVING AND SIDEWALK RESTORATION

PART 1: GENERAL

1.01 WORK INCLUDED

Under this section, the Contractor is to provide all labor, materials and equipment required to construct and maintain roads, walkways, and related site improvements. Road work is to include all roads and parking areas, and is to incorporate subgrades, paving, curb construction and related work. Walkways are to include level sidewalks and ramps. Restoration of any existing roads, curbs or walkways damaged during the course of the work is also included.

The Contractor shall file all necessary applications and obtain all necessary permits (unless otherwise noted in the Special Conditions) from the various state, county, and municipal offices involved and shall comply with all rules and regulations governing road openings in these roads.

1.02 RELATED WORK

Division 2 - Site Work

1.03 REFERENCE

Unless otherwise specified, all work under this section shall conform with the applicable provisions of the New Jersey Department of Transportation Standard Specifications for Road and Bridge construction, latest edition, (NJDOTSS) as amended by any subsequent supplements.

The Contractor is to comply with all local governing regulations if more stringent than herein specified.

1.04 SUBMITTALS

The Contractor shall submit for approval the pavement mix formula and material certifications that the base course I-2 or MABC and surface course I-5 or FABC meets the requirements of the NJDOT standard specifications.

PART 2: PRODUCTS

2.01 MATERIALS

Where additional subgrade material is required in connection with paving, it shall be DGA as specified under Section 2200.

Sub-base material shall conform to the requirements of the NJDOT standard specifications for Type I-5 quarry-processed stone aggregate, as specified under Section 2200.

Bituminous surface course paving material shall conform to the requirements of the NJDOT standard specifications for Mix I-5 FABC bituminous concrete.

Concrete curbs and headers shall conform to the requirements of the NJDOT standard specifications, Section 605.

Expansion joint filler for all curb and sidewalks shall meet the requirements of the NJDOT standard specifications, Section 908.

Tack coat material for preparing all surfaces prior to pavement placement shall be in conformance with NJDOT standard specifications, Section 404.

PART 3: EXECUTION

3.01 PAVEMENT RESTORATION

General Requirements

All pavement replacement in Municipal roads shall be done in strict accordance with the requirements of the municipality. All pavement replacement in County roads shall be done in strict accordance with the requirements of the County. Line striping shall be performed in accordance with Municipal and County requirements.

Replacement of permanent pavement in all county and municipal roads shall be deferred 6 (six) months or through one winter, whichever is greater, to insure permanent line and grade for the restored surfaces.

Excavation required after backfill has settled, prior to placing the base, shall be made neatly so as to minimize damage to the existing pavement. No extra payment will be made for any removal of the temporary pavement, including surfacing and base, prior to permanent pavement replacement.

Prior to placement of the permanent pavement, the face of the edge of pavement, manholes, and other projections shall be painted with hot asphalt cement.

Any damage to the portion of the pavement outside the limits of the pavement pay width, which in the opinion of the Engineer, has been caused by negligence of the Contractor, his workmen or agents, shall be repaired in a manner satisfactory to the Engineer and Municipal Road Inspector, by and at the expense of the Contractor.

All material furnished under this Item shall be in full accordance with the applicable section of the New Jersey Department of Transportation, Standard Specifications for Road and Bridge Construction, latest revision at time of bidding.

No permanent pavement shall be placed between December 1 and April 1.

All excavation required for preparing subgrades and for removing temporary pavement shall be included under this Item.

Prior to trench excavation, the Contractor shall outline the limits of excavation and saw cut same the full depth of pavement. All excavated pavement shall be disposed of off-site.

When the trench is backfilled, the Contractor shall keep the remaining portion of the pavement clean. The streets shall be swept, hosed down and otherwise maintained in a safe and satisfactory condition as outlined under Item 1. Calcium chloride shall be applied to control dust, except on County roads.

Municipal and Mercer County roadways and rights-of-way are not to be used for staging or storage yards by the Contractor unless written permission from the respective agency is provided.

Municipal Roads General Requirements

In areas under the jurisdiction of Municipalities, all pavement replacement, curbing, and sidewalk replacement shall be done in strict accordance with the following general requirements; and it shall be the Contractor's responsibility to ascertain any specific requirements other than those denoted for each Municipality. The Contractor shall file application for a permit for road opening in each Municipality.

1. All openings shall be properly guarded, day and night, with approved signs, barricades, lights, etc. If necessary, uniformed police traffic director or directors shall be provided. Transverse openings shall be restricted so that not more than one half of the traveled way will be obstructed at any time. Steel plates are to be used as a protection on openings maintained overnight in the traveled way.

2. After any opening is made, the work shall be energetically prosecuted and final restoration of disturbed surfaces shall be completed as soon as conditions permit.

3. Work shall be conducted to eliminate interference with subsurface utilities and their appurtenances unless permission for interference has been obtained from the proper authorities.

4. All excavations in roads shall be completely backfilled with quarry process road stone (Dense Graded Aggregate), compacted in lifts not exceeding 12 inches in depth and paved the same day. Trenches may not be flushed or puddled except by specific permission of the Municipality.

5. Traffic control requirements shall be coordinated with the Municipal Police Departments.

6. Road Opening Permits and Certificates of Insurance are required. The permit fee and the performance bond amount will be calculated once the Road Opening Permit has been submitted by the Contractor.

7. The contractor is advised that there may be a partly refundable deposit required for road opening permits. Such deposit will pay the municipality's costs for inspections.

Temporary Pavement in Municipal Roads

All pavement shall be saw cut full depth through the subbase. Work of temporary pavement placement shall be started immediately after trenches have been backfilled and compacted (unless otherwise stated herein). During the interval between completion of backfill and the time placement of temporary paving, all areas shall be maintained in a safe and satisfactory condition for normal traffic use.

Temporary pavement shall consist of eight-inch (8") compacted thickness of bituminous M.A.B.C. stabilized base compacted flush with the existing pavement. This temporary pavement shall be maintained in a safe and usable condition by placement of additional M.A.B.C. base as required for settlement, wear or erosion, with no additional payment.

The base course shall be placed in two equal layers. Tack coat shall be applied between layers and along all edges of pavement and valve boxes. The bituminous course shall then be placed and compacted. The Contractor shall maintain this temporary pavement flush with the surrounding surfaces.

If the Contractor fails to maintain his trench and pavements in a safe and satisfactory condition and following failure to remedy these conditions, the Owner may repair these areas at his own expense; and the cost will be deducted from the payment due the Contractor.

Temporary pavement restoration shall also include any temporary line striping required by the Municipality for safe traffic flow.

Permanent Pavement Replacement in Municipal Roads

The Contractor shall place the permanent pavement as soon as possible following acceptance of the new or restored mains by the Engineer and after written authorization from the Engineer to proceed with permanent pavement, which may include deferment of the paving for 6 months or 1 winter.

All excavation required in connection with the permanent pavement replacement operations shall be made neatly so as to minimize damage to the existing pavement.

Rubber tired equipment shall be employed, and extreme care shall be taken to prevent damage to or marking up of the existing pavement. If the existing pavement is disturbed, the Contractor shall repair and seal coat any damaged sections without additional payment. Pavements disturbed by the construction, but not in the trench area, shall be replaced or repaired. Such replacement or repairs shall be done in accordance with the Municipal requirements by, and at the expense of, the Contractor without additional payment.

All permanent pavement shall be completed prior to the onset of cold weather or shall be deferred until spring the following year. The Contractor will be responsible for maintaining the trench in good condition throughout the winter at no additional cost to the Owner.

At a minimum, permanent pavement replacement will involve milling out two inches (2") of the temporary M.A.B.C. base course and pavement a distance eighteen inches (18") each side beyond the existing pavement cut. Permanent pavement replacement is to be 2" F.A.B.C. (Mix No. 5) placed flush to existing pavement. Tack coat shall be applied between layers and along all edges of existing pavement and valve boxes.

Where noted on the Contract Drawings or required by the Engineer or the Municipality, the Contractor shall mill the existing pavement in Municipal Roads from eighteen inches (18") outside the pavement cut to the curb line a minimum of two inches (2") to provide a minimum six inch (6") curb face and as necessary to provide a 2% cross-slope from center-line; and as required to maintain existing driveway profiles.

When milling is complete, the Contractor shall prime coat the road with Tack Coat, RC-70 at a rate of 0.05 gallons per square yard prior to paving. Final pavement shall consist of a minimum thickness of two inches (2") or greater F.A.B.C. (Mix I-5) pavement flush with the existing pavement.

Any line striping disturbed by the construction is to be repaired as required by the local Municipality. Line striping includes, but is not limited to; double yellow line, white solid line, stop bars, turning arrows and any other permanent line work within the project areas.

3.03 CONCRETE CURBS

Concrete curbs are to be constructed where shown, and as detailed on the Contract Drawings, and as specified below.

Existing granite, belgian block, or stone curbing shall be salvaged and may be restored if approved by the Engineer as suitable for restoration. New stones matching the existing shall be furnished as required to replace damaged or broken pieces. Granite or stone curbing shall be set in a concrete foundation of approved dimensions.

Concrete curbing shall be replaced with new concrete curbing matching existing curbs. Curb dimensions shall be the same as the curbing replaced and shall be poured in steel forms. Curbing shall be provided with steel troweled finish and shall be jointed as required.

In general, curbing shall be replaced from expansion joint to expansion joint.

The compacted subgrade is to be stabilized and graded using approved methods and materials, and is to be reviewed by the Engineer before construction of curbs begin.

Forms for curbs are to be set to line and grade, and braced to full depth. The Contractor is not to remove forms on rear face or curb until concrete has set hard. Forms on front face are to be stripped as soon after the concrete has retained its shape as determined by the Engineer, but in no case sooner than two (2) hours after pouring. Exposed faces are than to be rubbed to a smooth even texture.

The Contractor is to repair surface defects and provide for curing and protection. All such work is to be performed by methods and materials approved by the Engineer.

Forms are to be steel, wood or other suitable material of the size and strength to resist movement during concrete placement and to retain horizontal and vertical

alignment until removal. The Contractor is to use straight forms, free of distortion and defects. The Contractor is to use flexible spring steel forms or laminated boards to form radius bends as required. All forms are to be coated with a non-staining form release agent that will not discolor or deface the surface of the concrete.

Welded wire mesh is to be welded cold-drawn steel wire fabric conforming to ASTM A185. Unless otherwise acceptable to the Engineer, flat sheets, not rolls, are to be furnished.

Reinforcing bars are to be deformed steel bars conforming to ASTM A615, Grade 601 unless otherwise indicated.

The Contractor is to comply with the requirements of applicable concrete sections under other divisions of these Specifications for all concrete materials, admixtures, bonding materials, curing materials, methods of placing and other requirements.

3.04 SIDEWALK RESTORATION

General Requirements

All sidewalk replacement shall be done in strict accordance with the requirements of the local governing body, and it shall be the Contractor's responsibility to ascertain any specific requirements other than those denoted under this Item.

Slate sidewalk shall be replaced by five inch (5") thick concrete walk, unless otherwise directed by the Municipality.

Temporary Bituminous Concrete Sidewalk

Temporary sidewalks shall be constructed as soon as possible after trenches have been back-filled. The subgrade shall be constructed smooth and even at the required depth. A ten inch (10") crushed stone base shall be placed, dusted and rolled. The Contractor shall then place and roll one (1") course of Type "A" bituminous concrete. Additional Type "A" shall be added as required for settlement, wear, or erosion, with no additional payment.

Permanent Concrete Sidewalk

The Contractor shall first remove the layer of Type "A" and the stone base to the required depth. Concrete shall be equal in thickness and appearance to existing walks. Minimum thickness for sidewalk shall be five inches (5") and for driveways six inches (6"). The concrete used shall conform to New Jersey State Department of Transportation Class "B", (3500 psi) air entrained concrete unless otherwise

indicated on drawings. Expansion joints which are removed shall be replaced without additional payment.

3.05 REPAIRS AND PROTECTION

The Contractor shall replace any damaged curbing with new curbing to match the existing curbing. Curb dimensions shall be in accordance with the details as shown on the Contract Drawings.

Any pavement which is damaged during the construction shall be replaced. All pavement replacement shall be performed in strict accordance with requirements of the applicable governing agency.

The Contractor is to repair or replace all broken or defective work as directed by the Engineer. He is to protect all work from damage until the acceptance of the work. Traffic is to be excluded from all concrete surfaces at least fourteen (14) days after placement. When construction traffic is permitted, the Contractor is to maintain all such concrete surfaces as clean as possible by removing all surfaces stains and spillage of materials as they occur.

The Contractor is to sweep all concrete surfaces and wash them free of stains, discolorations, dirt, and other foreign materials just prior to final inspection.

The Contractor is to be completely responsible for repairing any damage to roads caused by his transport operations. In general, roads used for hauling purposes are to be rebuilt as specified. Public roads are to remain operational, and necessary temporary and permanent repairs are to be made promptly upon notification of damage.

Should the Contractor fail to repair any damage to any roads caused by his operations within a reasonable time, the Owner may have the repairs made by others and will deduct the actual cost of such repairs from the Contractor's monthly estimate.

No additional or separate payments will be made for road restoration by the Contractor.

* * * * *

SECTION 2900

LANDSCAPING

PART 1: GENERAL

1.01 WORK INCLUDED

The work included in this section of the specifications shall consist of all labor, material and equipment required for the Contractor to provide a topsoil covering throughout the area to be seeded. In general, all areas of the site which are disturbed by construction and are not otherwise improved shall be topsoiled and seeded, except as otherwise shown on the Contract Drawings.

The furnishing and spreading of fertilizers and other surface treatment required for the growth of lawns, the furnishing and installation of seed and cutting and watering of such lawns shall also be included.

The work under this section also includes the furnishing and planting of trees and shrubs as shown on the Planting Plan of the Contract Drawings.

1.02 RELATED WORK

Section 2105 - Environmental Protection
Section 2200 - Earthwork

1.03 REFERENCES

All work included in this section shall meet the requirements of the local Soil Conservation District and be in accordance with the latest edition of "Standards for Soil Erosion and Sediment Control in New Jersey".

PART 2: PRODUCTS

2.01 TOPSOIL

Topsoil taken from original excavations shall be carefully stored separately and all stockpiled topsoil shall be thoroughly cleared of all sticks, roots, branches, coarse sods and other deleterious matter, and all stones larger than one inch (1") in diameter before it is respread. Additional topsoil, as required, shall be furnished by the Contractor at no additional cost. A minimum thickness of topsoil of four inches (4") will be required at all locations.

Additional topsoil shall be natural topsoil sandy loam, thoroughly cleared of all sticks, roots, branches, coarse sods and other deleterious matter, and all stone larger than one inch (1") in diameter before it is spread. Topsoil shall contain at least 3 percent organic matter determined by loss on ignition of moisture-free samples. The acidity range shall be pH 5.0 to pH 7.0, inclusive. The mechanical analysis of the soil shall be:

Passing	**Retain On**	**Percentage**
1" Screen	-	100%
1" Screen	1/4" Screen (Gravel not more than)	3%
1/4" Screen	#100 USS Sieve (Coarse, Medium & Fine Sand)	40%-60%
#100 USS Sieve	(Very Fine Sand, Silt & Clay In Equal Proportion)	40%-60%

2.02 FERTILIZER

The Contractor shall apply limestone and fertilizer in accordance with Soil Conservation District standards, as shown on the Drawings.

2.03 SEED

The seed mixture shall be sown at a rate of 100 pounds per acre, and shall consist of the following:

Seed	Minimum Purity %	Minimum Germination	% of Total Weight of Mixture
Kentucky Blue Grass	85	75	20
Red Fescues (creeping or chewing)	95	80	35
Kentucky 31	95	80	20
Redtop	92	85	10
Perennial Ryegrass	98	85	15

The seed shall contain practically no seeds of noxious weeds and shall be delivered mixed in uniform sealed bags showing weights, analysis, and vendor's name.

Refer to Section 4 of the Standards for Soil Erosion and Sediment Control in New Jersey for other seed mixtures. The use of other seed mixtures will be allowed with written acceptance from the Soil Conservation District.

2.04 MULCH

Mulch for seeded areas shall be straw reasonably free of weed seed and any foreign materials which may affect plant growth. Other materials may be used if approved by the Engineer.

Mulch shall have no leaves, young green growth, wood shavings, sawdust, or foreign materials of any nature mixed with the bark.

PART 3: EXECUTION

3.01 PREPARATION OF SEED BED

If suitable topsoil is available as part of the excavated material it shall be removed, stored, and respread over the top 4 inches of the excavation. All grass, weeds, roots, sticks, stones, and other debris are to be removed and the topsoil carefully brought to the finished grade, as shown by the elevations on the drawings, by raking.

In areas, where there is a deficiency of suitable topsoil, the Contractor shall furnish 4 inches of topsoil, as described in Part 2.01 of this section, to be used as a seed bed.

Topsoil shall not be handled or spread when it is in a frozen or muddy condition, or otherwise unsuitable for handling. No topsoil shall be spread before completion of all construction in the area or before all fills are fully stabilized.

3.02 FERTILIZING

After topsoil is in place, fertilizer shall be uniformly applied to all areas to be seeded at the rate shown on the Contract Drawings. The fertilizer shall be thoroughly disked, harrowed or raked into the soil. Immediately before sowing the seed, the Contractor shall rework the surface until it is a fine, pulverized, smooth seed bed, varying not more than 1 inch in 10 feet.

3.03 SEEDING

Immediately after the preparation and fertilization of the seed bed, the seed shall be thoroughly mixed and then evenly sown over the prepared areas at the rate indicated in Part 2.03. Seed shall be rolled with a water ballast roller, watered, and protected by an tended by the Contractor until there is a hardy stand of grass. Areas

not thus productive shall be re-fertilized and reseeded as above until grass is established.

Seeded areas which erode during the one year maintenance period shall be repaired and restored by the Contractor in accordance with all provisions of this Section of the specifications.

Dates and schedules for seeding operations shall be as approved by the Engineer. Seeding shall be done in favorable weather, in the fall where possible, and in early spring if necessary to complete unfinished areas.

The Contractor shall take all necessary steps to produce a satisfactory lawn covering. Such steps shall include the thorough watering of the new lawn until it has received its second cutting. The cost of such watering shall be borne by the Contractor, and the equipment and manpower shall be furnished by the Contractor.

The Contractor shall also be held responsible for two (2) cuttings of all lawns. Any lawn areas which have not developed after two (2) cuttings shall be cut out and reseeded and fertilized, as specified above, watered, and cut until a full lawn is produced.

The cutting of lawn shall not occur closer than 5 to 7 days, or as directed by the Engineer.

3.04 MULCHING

Within 48 hours after any given area is seeded, mulching material shall be evenly placed over all seeded areas at the rate shown on the Contract Drawings.

No seeded areas shall remain unmulched longer than 48 hours. All mulch shall be left in place to disintegrate, except the Contractor shall remove excessive amounts of mulch when so directed by the Engineer.

3.05 EMULSION

Mulching which is displaced shall be replaced at once but only after the seeding or other work which preceded the mulching and which work was damaged as a result of displacement of mulching material has been acceptably repaired.

3.06 MAINTENANCE

ALL SEEDED and sodded areas shall be carefully maintained, tended and watered by the Contractor as necessary to secure a good turf. Settled areas shall be filled, graded and reseeded or resodded. The Contractor shall be responsible for the

condition of the seeded and sodded areas for a period of one year from the date of final completion.

During landscape work, the Contractor is to store all materials and equipment in secure and weather-protected areas. He is to keep all pavement cleaned and work areas in an orderly condition.

The Contractor is to protect all landscape work and materials from loss, damage, and deterioration during storage, installation, and maintenance periods. He is to protect them from all unauthorized persons as well as from operations by other subcontractors and tradesmen.

* * * * *

DIVISION 15 - MECHANICAL

SECTION 15000
PIPING - GENERAL PROVISIONS

PART 1: GENERAL

1.01 DRAWINGS

Dimensions shown on Contract Drawings are approximate only. CONTRACTOR shall verify all piping geometry in the field and shall be responsible for insuring proper alignment and fit of all piping consistent with the intent of the Contract Drawings. Field layout drawings shall be submitted as required for approval.

1.02 WORK INCLUDED

Section 15000 – Piping – General Provisions
Section 15020 – Chlorinating Pipelines
Section 15030 – Pressure and Leakage Tests
Section 15106 – Ductile Iron Pipe and Fittings
Section 15122 – HDPE Pipe and Fittings

PART 2: PRODUCTS

2.01 CONTRACTOR'S RESPONSIBILITY FOR MATERIAL

The CONTRACTOR shall carefully examine all material for defects. Material which is known, or thought, to be defective shall not be installed.

The ENGINEER reserves the right to inspect all material and to reject all defective material shipped to the job site or stored on the site. Failure of the ENGINEER to detect damaged material shall not relieve the CONTRACTOR from his total responsibility for the completed work if it leaks or breaks after installation. Lay all defective material aside for final inspection by the ENGINEER to determine if corrective repairs may be made, or if the material is to be rejected. The ENGINEER shall determine the extent of the repairs.

CONTRACTOR to classify defective pipe prior to ENGINEER's inspection as follows:

1. Damage to interior and/or exterior paint seal coats.
2. Damage to interior cement-mortar lining.
3. Insufficient cement-mortar lining thickness.
4. Poor quality interior paint seal coat.
5. Pipe out of round.
6. Damaged pipe barrel area to a point where pipe class thickness is reduced.
7. Denting or gouges in plain end of pipe.

The CONTRACTOR shall be responsible for all material, equipment, fixtures and devices furnished and such materials, equipment, fixtures and devices shall comply with the requirements and standards

of all Federal, State and local laws, ordinances, codes, rules and regulations governing safety and health.

The CONTRACTOR shall be solely responsible for the safe storage of all material furnished to or by him until it has been incorporated in the completed project and accepted by the ENGINEER.

Pipe, fittings, valves, hydrants and accessories shall be loaded and unloaded by lifting with hoists or skidding so as to avoid shock or damage. Under no circumstances shall such materials be dropped. Pipe handled on skidways shall not be skidded or rolled against other pipe. Handling of this material is to be in accordance with AWWA C600 for ductile iron pipe. Refer to Section 15122 for delivery, storage and handling of HDPE pipe.

Keep fittings and valves drained and stored before installation in a manner protecting them from damage due to freezing of trapped water.

PART 3: EXECUTION

3.01 INSTALLATION - GENERAL REQUIREMENTS

All pipe shall be laid and maintained to the required lines and depths. Fittings, valves and hydrants shall be at the required locations with joints centered, spigots home and all valve and hydrant stems plumb and otherwise in strict accordance with the Specifications.

All buried steel lugs, rods, brackets and flanged joint bolts and nuts shall be given two (2) coats of Koppers #50 coal tar coating prior to backfilling and polyethylene encased if the specifications require polyethylene encasement of pipe.

No deviation shall be made from the required alignment, depth or grade except with the written consent of the ENGINEER.

All pipe shall be laid to the depth specified. The depth shall be measured from the final surface grade to the top of the pipe barrel. The minimum pipe cover shall be as shown on the Drawings or as specified in the Specifications.

Do not lay pipe in a wet trench, on sub-grade containing frost, and when trench conditions are unsuitable for such work. If all efforts fail to obtain a stable dry trench bottom and the ENGINEER determines that the trench bottom is unsuitable for trench foundation, he will order in writing the kind of stabilization to be constructed.

Thoroughly clean the pipes and fittings before they are installed and this material shall be kept clean until the acceptance of the completed work. Lay pipe with the bell ends facing in the direction of laying, unless otherwise shown on the Drawings, or directed by the ENGINEER. Exercise care to insure that each length abuts against the next in such manner that no shoulder or unevenness of any kind occurs in the pipe line.

No wedging or blocking is permitted in laying pipe unless by written order of ENGINEER.

Before joints are made, bed each section of pipe the full length of the barrel with recesses excavated so pipe invert forms continuous grade with invert of pipe previously laid. Do not bring succeeding pipe into position until the preceding length is embedded and securely in place.

Dig bell holes sufficiently large to permit proper joint making and to insure pipe is firmly bedded full length of its barrel.

Walking or working on completed pipeline, except as necessary in tamping and backfilling, is not permitted until trench is backfilled one-foot deep over top of pipes.

Take up and relay pipe that is out of alignment or grade, or pipe having disturbed joints after laying.

Take up and replace with new, such in-place pipe sections found to be defective. Replacement work at CONTRACTOR's expense.

Take necessary precautions to prevent the floating of the pipeline by the accumulation of water in the trench, or the collapse of the pipeline from any cause. Should floating or collapse occur, restoration will be at the CONTRACTOR's expense.

Bedding materials for the pipe bedding shall be as specified previously in Division 2.

Take every precaution to prevent foreign material from entering the pipe while it is being placed. During laying operations, do not place debris, tools, clothing, or other materials in the pipe.

Close all openings in the pipeline with watertight plugs when pipe laying is stopped at the close of the day's work or for other reasons, such as rest breaks or meal periods.

Place enough backfill over the center sections of the pipe to prevent floating.

Carry out the cutting of pipe only with equipment specifically designed for that purpose such as an abrasive wheel, rotary wheel cutter, a guillotine pipe saw or a milling wheel saw. The use of chisels or hand saws will not be permitted. Cut ends and rough edges should be ground smooth and for push-on connections, the cut end should be beveled slightly.

In distributing material at the site of the Work, each piece shall be unloaded opposite or near the place where it is to be laid in the trench.

If the pipe is to be strung out, it shall be done so in a straight line or in a line conforming to the curvature of the street. Each length of pipe shall be adequately blocked to prevent movement. Stockpiled pipe shall be adequately blocked to prevent movement. No pipe, material, or any other object shall be placed on private property, obstruct walkways or driveways, or in any manner interfere with the normal flow of traffic.

Special care shall be exercised, during handling temporary storage or construction to avoid damage to the bells, spigots or flanged ends. If damaged pipe cannot be repaired to the ENGINEER's satisfaction, it shall be replaced at the CONTRACTOR's expense.

The CONTRACTOR shall remove all existing pipe, fittings, valves, pipe supports and blocking and all other items necessary to provide space for making connections to existing pipe and installing all piping which is to be done under this Contract.

The CONTRACTOR shall be responsible for maintaining the minimum required distance between the water line and other utility lines in strict accordance with all Federal, State and local requirements and all right-of-way limitations.

Maximum allowable deflection at the joints for push-on joint pipe, regardless of pipe material, shall be as follows providing manufacturer's recommendations are not more stringent:

Size of Pipe	Deflection Angle	Maximum Deflection (18-ft. Length)	(20-ft. Length)
thru 12"	2-1/2°	9-1/2"	10-1/2"
14"-36"	1-1/2°	5-1/2"	6"
42"-48"	1°	3-1/4"	4"

In case the curve is too sharp for the allowable deflection, short lengths of pipe may be used upon approval of the ENGINEER and at no additional cost to the OWNER.

Maximum pipe bending radius shall be in conformance with the manufacturer's recommendation for the specific diameter and dimension ratio (DR) of the pipe. HDPE pipe shall only be deflected upon approval of the ENGINEER, unless otherwise shown on the Contract Drawings.

Where shown on the Drawings, the CONTRACTOR shall furnish air relief valve assemblies in accordance with the details shown on the Contract Drawings. Particular care shall be exercised to ensure that no high points are established where air can accumulate. In the event that unforeseen field conditions necessitate a change in the pipe profile and, in the opinion of the ENGINEER, the resulting change requires the installation of an air release valve and manhole, install the same as extra Work to the Contract. If the CONTRACTOR requests a change in the pipe profile solely for ease of construction, and the requested change requires the installation of an air release valve and manhole as determined by the ENGINEER, then the cost of furnishing and installing the air release valve and manhole will be at the expense of the CONTRACTOR.

3.02 CONSTRUCTION METHODS TO AVOID CONTAMINATION

Heavy particulates generally contain bacteria and prevent even very high chlorine concentrations from contacting and killing such organisms. It is essential that the procedures of this section be observed to assure that a water main and its appurtenances are thoroughly clean for the final disinfection by chlorination.

Precautions shall be taken to protect the interiors of pipes, fittings, and valves against contamination. Pipe delivered for construction shall be strung so as to minimize entrance of foreign material. All openings in the pipeline shall be closed with watertight plugs when pipe laying is stopped at the close of the day's work or for other reasons, such as rest breaks or meal periods. Rodent-proof plugs may be used where it is determined that watertight plugs are not practical and where thorough cleaning will be performed.

Delay in placement of delivered pipe invites contamination. The more closely the rate of delivery is correlated to the rate of pipe laying, the less likelihood of contamination.

Joints of all pipe in the trench shall be completed before work is stopped. If water accumulates in the trench, the plugs shall remain in place until the trench is dry.

Yarning or packing material shall consist of molded or tubular rubber rings, or rope of treated paper or other approved materials. Materials such as jute, asbestos or hemp shall not be used. Packing material shall be handled in a manner that avoids contamination.

No contaminated material or any material capable of supporting prolific growth of microorganisms shall be used for sealing joints. Sealing material or gaskets shall be handled in a manner that avoids contamination. The lubricant used in the installation of sealing gaskets shall be suitable for use in potable water. It shall be delivered to the job in closed containers and shall be kept clean.

If it is not possible to keep the pipe and fittings dry during installation, every effort shall be made to assure that any of the water that may enter the pipe joint spaces contains an available chlorine concentration of approximately 25 mg/L. This may be accomplished by adding calcium hypochlorite granules or tablets to each length of pipe before it is lowered into a wet trench, or by treating the trench water with hypochlorite tablets.

If the main is flooded during construction, it shall be cleared of the flood water by draining and flushing with potable water until the main is clean. The section exposed to the flood water shall then be filled with a chlorinated potable water that, at the end of a 24 hour holding period, will have a free chlorine residual of not less than 25 mg/L. The chlorinated water may then be drained or flushed from the main.

3.03 VALVE INSTALLATION

Prior to installation, inspect valves for direction of opening, freedom of operation, tightness of pressure containing bolting, cleanliness of valve ports and especially seating surfaces, handling damage and cracks. Correct defective valves or hold for inspection by the ENGINEER.

Set and join to the pipe in the manner specified in Section 3.01. Provide valves 12-inch and larger with special support, such as crushed stone or concrete pads, so that the pipe will not be required to support the weight of the valve. Set truly vertical.

Provide all valves with a valve box. Set the top of the valve box neatly to the grade of the surface of the existing ground, unless directed otherwise by the ENGINEER. Do not transfer shock or stress to the valve, and center and plumb the box over the wrench nut of the valve. Do not use valves to bring misaligned pipe into alignment during installation. Top of box shall be flush with pavement in paved areas and shall be one-inch above ground surface in grassed or earth areas. In grassed or earth areas, valve boxes shall be set in a concrete pad with minimum dimensions of 20" x 20" x 4". Support pipe in such manner as to prevent stress on the valve.

3.05 THRUST RESTRAINT

Provide all plugs, caps, tees, and bends (both horizontal and vertical) with concrete reaction backings, tie rods and/or restrained joint pipe as detailed on the Drawings. Valves shall be provided with joint restraint as detailed on the Drawings.

Temporary thrust restraint at temporary caps or plugs shall be the responsibility of the CONTRACTOR. Submit details of temporary restraint to the ENGINEER for approval.

SECTION 15010

PIPE COUPLINGS

PART 1: GENERAL

1.01 WORK INCLUDED

The CONTRACTOR shall furnish and install all pipe couplings where shown on the drawings, where required or as directed to provide proper jointing of piping for all services, or as specified herein.

Pipe couplings shall be deemed to include all flexible couplings, long couplings, reducing couplings, insulating couplings, compression couplings, cast couplings, lock couplings, sleeve type couplings, and mechanical type couplings.

1.02 RELATED WORK

Section 15000 - Piping General Provisions

1.03 SUBMITTALS

Shop drawings and Manufacturer's literature outlining locations and completely detailing types of couplings to be used shall be submitted for approval prior to their fabrication and well in advance of piping work.

1.04 COUPLING SUPPLIERS

The appropriate type and style coupling shall be as manufactured, respectively, by Dresser Industries, Smith-Blair or approved equal.

PART 2: PRODUCTS

Couplings shall have pressure ratings at least equal to the test pressures applied to the pipes being joined. Gaskets shall be of elastomeric synthetic rubber material and shall be of the type and composition recommended by the coupling Manufacturer for the service and temperature intended.

Where connections are to be made between pipes of varying outside diameters and/or materials, the Contractor shall provide appropriate transition couplings.

2.01 MATERIALS: PIPE COUPLINGS

A. Sleeved Couplings

Sleeved couplings shall be of the flexible, gasketed sleeve type, of type and diameter to properly fit the pipes to be joined and consisting basically of a middle ring, two gaskets and followers and steel bolts to compress the gaskets. The coupling type and design shall be as recommended by the coupling manufacturer for the pipe sizes, materials and pressures intended. Couplings shall be as manufactured by Dresser Industries, Inc. or Smith-Blair, Inc.. All couplings shall be adequately harnessed to withstand the test pressures in the lines unless other means are provided to take the thrust.

Steel couplings shall be furnished with a factory applied epoxy coating. Coating shall be "Al-Clad" as furnished by Dresser, or equivalent by approved alternate coupling manufacturer.

Cast or ductile iron couplings shall be furnished with the Manufacturer's standard enamel coating.

PART 3: EXECUTION

3.01 INSTALLATION

All coupling installations shall be strictly in accordance with the coupling Manufacturer's instructions and recommendations. The Contractor shall provide the service of the coupling Manufacturer's personnel as required to guide and advise during the installation.

Where sleeve-type couplings are used, adequate restraint must be provided to prevent separation of the joint due to thrusts at the specified test pressures.

* * * * *

SECTION 15020
CHLORINATING PIPELINES

PART 1: GENERAL

1.01 SCOPE OF WORK

The CONTRACTOR shall chlorinate and disinfect all pipelines installed under this Contract.

1.02 RELATED WORK

Pipeline installation precautions to avoid contamination are described in Specification Section 15000.

PART 2: PRODUCTS

2.01 MATERIALS AND EQUIPMENT

The CONTRACTOR shall furnish hypochlorite liquid and injection equipment as needed to complete the disinfection of all pipelines. The CONTRACTOR shall be responsible for installing an adequate amount of corporations and flushing ports to flush and disinfect the main.

Sodium hypochlorite is to be furnished in accordance with AWWA B300.

PART 3: EXECUTION

3.01 PREPARATION

All pipelines shall be pressure and leak tested, flushed, and cleaned of debris and dirt prior to application of the disinfectant. The pipeline is to be kept completely clean and dry during construction.

The CONTRACTOR will be required to submit a procedure for flushing, disinfecting and disposal of chlorinated water to the ENGINEER for approval.

3.02 APPLICATION OF DISINFECTANT

All new water lines shall be flushed and disinfected upon completion of pressure testing in accordance with the recommendation of Standard for Disinfecting Water Mains (AWWA C651) of the American Water Works Association, except as may be modified herein.

Following chlorination and after the entire length of line is ready for operation, all treated water shall be flushed thoroughly from the newly laid pipeline, at its extremities. The water shall be flushed, until the replacement water throughout its length will, upon test, both chemical and bacteriological, be proved equal to the

quality introduced at the permanent source of supply. Samples for laboratory analysis shall be taken after water has stood in the main at least 24 hours following flushing. Should the initial treatment prove ineffective, the chlorination procedure shall be repeated as directed until confirmed tests show the water from the newly laid pipe conforms to the requirements of the preceding section.

All work of flushing and disinfecting shall be the responsibility of the Contractor. Following completion of sterilization and flushing, the Owner shall obtain samples and have them analyzed, and reported upon by a recognized testing laboratory. The costs of the services of the testing laboratory will be borne by the Owner.

The Contractor shall be responsible for furnishing and installing sufficient quantity of corporations for the addition of chlorine, at no additional cost other than the unit price bid under this item.

No newly laid water main may be placed into service until approval is given by the Engineer.

3.03 DISPOSAL OF HEAVILY CHLORINATED WATER

Dechlorination shall be per Field Dechlorination (AWWA C651) of the American Water Works Association, except as may be modified herein.

After the applicable retention period, heavily chlorinated water should not remain in contact with pipe for more than 24 hours. In order to prevent damage to the pipe lining or corrosion damage to the pipe itself, the heavily chlorinated water shall be flushed from the main until chlorine measurements show that the concentration in the water leaving the main is no higher than that generally prevailing in the system or is acceptable for domestic use. Contractor shall contact the local sewer department to arrange for disposal of the heavily chlorinated water to the sanitary sewer.

The chlorine residual of water being disposed shall be neutralized by treating with one of the chemicals listed in Table 1. If a sanitary sewer system is unavailable for disposal of the chlorinated water, an alternative disposal site must be selected. The proposed alternative disposal site to which the chlorinated water is to be discharged shall be inspected and approved by the Engineer.

A reducing agent shall be applied to the chlorinated water to be wasted to completely neutralize the chlorine residual remaining in the water. (See Table 1 for neutralizing chemicals). Where necessary, federal, state and local regulatory agencies should be contacted to determine special provisions for the disposal of heavily chlorinated water.

Table 1

Pounds of chemicals required to neutralize various residuals chlorine concentrations in 100,000 gallons of water.

Residual Chlorine Concentration MG/l	Sulfur Dioxide (SO_2)	Sodium Bisulfate ($NaHSO_3$)	Sodium Sulfite ($NaSO_3$)	Sodium Thiosulfate ($Na_2S_2O_35H_2O$)
1	0.8	1.2	1.4	1.2
2	1.7	2.5	2.9	2.4
10	8.3	12.5	14.6	12.0
50	41.7	62.6	73.0	60.0

SECTION 15030
PRESSURE AND LEAKAGE TESTS

PART 1: GENERAL

1.01 SCOPE OF WORK

The CONTRACTOR shall test all piping, valves and appurtenances installed under these Contract Documents. Testing shall be performed concurrent with installation. All tests must be witnessed by the ENGINEER.

1.02 SUBMITTALS

The CONTRACTOR shall prepare and submit to the ENGINEER schedules and procedures for testing of all parts of the water main installed in accordance with these Contract Documents. The schedule shall be submitted seven days prior to any testing.

1.03 REFERENCES

A. ASTM F 2164 Standard Practice for Field Leak Testing of Polyethylene (PE) Pressure Piping Systems Using Hydrostatic Pressure

PART 2: PRODUCTS

2.01 EQUIPMENT

The Contractor shall furnish all labor, materials and equipment for performing these tests in the presence of the Engineer, including pump, pipe connections, calibrated pressure gauges, test bulkheads, filling, draining, and air release connections and valves.

PART 3: EXECUTION

3.01 GENERAL

When a reach of pipe deemed adequate by the ENGINEER is ready for testing, the pipeline shall be pressure and leak tested. The pressure and leak tests shall be in accordance with ASTM F2164, latest revisions, except as described herein. The CONTRACTOR shall develop his own plan for successfully testing the pipeline and the exact means of testing is the CONTRACTOR's responsibility. The CONTRACTOR's plan shall be in accordance with the Specifications and shall be approved by the OWNER and the ENGINEER.

The CONTRACTOR may, at his option, completely backfill the trench or partially backfill the trench over the center portion of each pipe section to be tested. The ENGINEER may however direct the CONTRACTOR to completely backfill the trench if local traffic or safety conditions require such action.

The maximum test pressure (at lowest elevation point of test section) for all pipes shall be 150 psig ±5 psig. The total test duration shall be 5 hours, consisting of an initial expansion phase (4 hours) and a test phase (one hour).

3.02 FILLING AND TESTING

Prior to filling the pipeline, each main line and side line valve shall be operated over its full range of travel. Each segregated section of pipeline will be slowly filled with water ensuring that all air is expelled. Extreme care must be taken to ensure all air is expelled from the pipeline during the filling of pipe with water. The line shall stand full of water for twenty-four hours prior to testing to allow all air to escape. If necessary, tap the main at points of highest elevation so that air can be expelled as the pipe is filled with water. After successful completion of filling and air expulsion, but prior to testing, the corporation stops shall be removed and the taps tightly plugged.

Initial Expansion Phase: When the test section is completely filled and purged of air, the CONTRACTOR shall gradually increase pressure in the test section to the required test pressure. If the test pressure cannot be attained, or if it takes an unreasonably long time to reach test pressure, there may be faults such as excessive leakage, entrapped air, or open valving. If such faults exist, the CONTRACTOR shall discontinue the pressurizing and locate and correct the fault before continuing. When the test pressure is reached, the CONTRACTOR shall add make-up water as necessary to maintain maximum test pressure for four (4) hours. The CONTRACTOR shall record pipeline pressure and water flow into the pipeline at 10-minute intervals.

Test Phase: After the initial expansion phase the contractor shall reduce the test pressure by 10 psi and monitor pressure for one (1) hour. The CONTRACTOR shall not increase pressures or add make-up water during the test phase. The CONTRACTOR shall record pipeline pressure at 10-minute intervals.

If no visual leakage is observed and pressure during the test phase remains within 5% of the test phase pressure for the one hour test phase period, leakage is not indicated.

Should any test disclose damaged or defective materials or leakage is detected, the CONTRACTOR shall at his own expense, locate and repair and/or replace defective materials. The tests shall be repeated until the leakage is within the permitted allowance and is satisfactory to the ENGINEER. If the test is not completed because of leakage, equipment failure, or any other reason with the total time, the test section should be depressurized and allowed to "relax" for at least eight hours before starting the next testing sequence.

3.03 REQUIREMENTS AFTER TESTING

After successful completion of the leakage tests, the pipeline shall be depressurized and the test equipment shall be disconnected. The pipeline shall then be flushed in accordance with the recommendation of "Standard for Disinfecting Water Mains", (AWWA C651) of the American Water Works Association, except as may be modified herein. Flushing operations may, at the direction of the OWNER, need to be scheduled during off-peak demand periods, including nights, at no additional cost.

***

SECTION 15106
DUCTILE IRON PIPE AND FITTINGS

PART 1: GENERAL

1.01 COORDINATION OF WORK

Connection to existing pipelines may require shutdown of OWNER facilities. Construction work and connections shall be closely coordinated with the OWNER through the ENGINEER. The ENGINEER, in consult with the OWNER, may select the time, including Saturdays, Sundays, or holidays, which, in the opinion of the ENGINEER, will cause the least inconvenience to the OWNER and/or its customers, for connection to existing pipelines, and the CONTRACTOR will perform such connections at such times as may be directed by the ENGINEER at the Contract prices and no claim for premium time or additional costs will be made by the CONTRACTOR.

1.02 RELATED WORK

Piping - General Provisions - Section 15000

1.03 SUBMITTALS

Shop drawings and manufacturer's literature for all CONTRACTOR supplied materials shall be promptly submitted to the ENGINEER for approval.

The following items shall be submitted before delivery of ductile iron pipe or fittings:

1. Certification by the manufacturer or supplier that the pipe furnished for this project meets all pertinent AWWA Standards.

2. Laying schedule for boltless restrained joint and push-on joint pipe.

3. Catalog cuts and installation instructions for boltless restrained joint pipe and mechanical joint retainer glands.

4. Certification that all bolts to be furnished conform to the referenced standards and are manufactured in the United States of America.

1.04 PIPE SUPPLIER

Ductile iron pipe shall be as manufactured by U.S. Pipe and Foundry, American Ductile Iron Pipe, or approved equal.

PART 2: PRODUCTS

Research has documented that certain pipe materials (such as polyvinyl chloride, polyethylene, and polybutylene) and certain elastomers (such as those used in gasket mater-

ial) may be subject to permeation by lower-molecular weight organic solvents or petroleum products. Products supplied under this section have been selected based on the non-expectation of encountering petroleum products or organic solvents. If during the course of pipeline installation the CONTRACTOR identifies, or suspects, the presence of petroleum products or any unknown chemical substance the ENGINEER is to be notified immediately. Installation of any further piping in the area of suspected contamination shall be stopped until direction is provided by the ENGINEER.

2.01 PIPE MATERIAL

A. General

Ductile iron pipe shall conform to the latest specifications as adopted by the American National Standards Institute, Inc., (ANSI) and the American Water Works Association (AWWA). Specifically, ductile iron pipe shall conform to ANSI/AWWA C151/A21.51.

The pipe shall be coated outside with a bituminous coating in accordance with ANSI/AWWA C151/A21.51. The pipe interior shall be cement mortar lined and seal coated in compliance with the latest revision of ANSI/AWWA C104/A21.4. The cement mortar lining shall be double thickness.

B. Pipe Class

The class of pipe to be furnished shall be as a minimum pressure Class 52 for mains 20 inches and smaller. Where indicated on the Drawings or in the Specification Special Conditions thicker classes shall be furnished.

C. Testing

Each length of pipe shall be subjected to a hydrostatic proof test as required by ANSI/AWWA C151/A21.51.

D. Joints

1. Mechanical and Push-On

Mechanical and push-on joints including accessories shall conform to ANSI/AWWA C111/A21.11.

2.02 FITTINGS

A. Ductile Iron Fittings

Standard fittings shall be ductile iron conforming to ANSI/AWWA C110/A21.10. Compact ductile iron fittings shall meet the requirements of ANSI/AWWA C153/A21.53.

1. Working Pressures

Fittings shall be suitable for the following working pressures unless otherwise noted:

Size	Pressure Pounds per Square Inch Compact Ductile Iron	Standard Ductile Iron
3" - 24"	350	350

2. Coating and Lining

The fittings shall be coated with a bituminous coating in accordance with ANSI/AWWA C110/A21.10 and lined inside with cement mortar and seal coated in accordance with ANSI/AWWA C104/A21.4. The cement mortar lining shall be double thickness.

B. Joints

1. Mechanical and Push-On

Mechanical and push-on joints including accessories shall conform to ANSI/AWWA C111/A21.11.

2.03 MARKING PIPE

Each pipe, fitting or special section shall have plainly marked thereon:

1. Pipe Class
2. Date of Manufacture
3. Manufacturer's name or trademark
4. On bends, the angle turned thereby
5. Manufacturer's identification number

2.04 RANDOM FITTINGS

An adequate supply of fittings shall be maintained on the job at all times for the various pipe sizes specified on the project to facilitate any necessary field changes. The CONTRACTOR shall notify the manufacturer as these items are used so that they may be promptly replaced. As a minimum, two 45 degree and two 22-1/2 degree bends with mechanical joints shall also be maintained on the job site at all times in order to accommodate field changes.

No additional payments will be made to maintain this material on-site. The CONTRACTOR shall include the cost of these fittings in the various unit prices bid. Following completion of the project, the CONTRACTOR shall remove the fittings from the site.

PART 3: EXECUTION

3.01 INSTALLATION

The provisions specified in Section 15000 shall be strictly followed in addition to the following requirements:

A. Push-On Joints

The surfaces with which the rubber gasket comes in contact shall be thoroughly cleaned just prior to assembly. The gasket shall then be inserted into the groove in the bell. Before starting joint assembly, a liberal coating of special lubricant shall be applied to the gasket and the spigot end. With the spigot end centered in the bell, the spigot end is pushed home.

B. Mechanical Joints

All components shall be cleaned and lubricated with soapy water prior to assembly. Slip the follower gland and gasket over the pipe plain end making sure the small side of the gasket and lip of the gland face the bell socket. Insert the plain end into socket. Push gasket into position with fingers, gasket should be evenly seated. Slide gland into position, insert bolts and tighten must by hand. Bolts are then tightened alternately (across from one another) to the following normal torques:

Bolt Size	Range of Torque In Foot-Pounds
5/8"	40 - 60
3/4"	60 - 90
1"	70 - 100
1-1/4"	90 - 120

SECTION 15123

HIGH DENSITY POLYETHYLENE (HDPE) PIPE AND FITTINGS

PART 1: GENERAL

1.01 WORK INCLUDED

Furnishing and installing 4-inch through 63-inch high density polyethylene (HDPE) pipe and fittings for water distribution and transmission.

1.02 REFERENCES

A. AWWA C906: Polyethylene (PE) Pressure Pipe and Fittings, 4 in. (100 mm) though 63 in. (1,575 mm), for Water Distribution and Transmission.

B. ASTM D3350: Standard Specification for Polyethylene Plastics Pipe and Fittings Materials.

C. ASTM D3261: Standard Specification for Butt Heat Fusion Polyethylene (PE) Plastic Fittings for Polyethylene (PE) Plastic Pipe and Tubing.

D. ASTM F1055: Standard Specification for Electrofusion Type Polyethylene Fittings for Outside Diameter Controlled Polyethylene Pipe and Tubing.

E. ANSI/NSF Standard 61: Drinking Water System Components - Health Effects.

F. ASTM D2774: Standard Practice for Underground Installation of Thermoplastic Pressure Piping.

G. ASTM D2321-00: Standard Practice for Underground Installation of Thermoplastic Pipe for Sewers and Other Gravity-Flow Applications.

H. ASTM F2620 Standard Practice for Heat Fusion Joining of Polyethylene Pipe and Fittings

I. ASTM F714 Standard Specification for Polyethylene (PE) Plastic Pipe (SDR-PR) Based on Outside Diameter

J. ASTM F2164 Standard Practice for Field Leak Testing of Polyethylene (PE) Pressure Piping Systems Using Hydrostatic Pressure

K. AWWA C651: Disinfecting Water Mains.

1.03 SUBMITTALS

Submit manufacturer's product data, installation instructions, and certification for all materials to be furnished. Submit classification and gradation test results for material(s) to be used for pipe embedment and backfill.

1.04 COORDINATION OF WORK

Connection to existing pipelines may require shutdown of OWNER facilities. Closely coordinate construction work and connections with the OWNER through the ENGINEER. The ENGINEER, in consultation with the OWNER, may select the time for connection to existing pipelines, including Saturdays, Sundays, or holidays, which, in the opinion of the ENGINEER, will cause the least inconvenience to the OWNER and/or its customers, Make such connections at such times as may be directed by the OWNER, at the Contract prices, with no claim for premium time or additional costs.

PART 2: PRODUCTS

2.01 MATERIALS

A. Polyethylene pipe, fittings and adapters shall be made from HDPE material having a material designation code of PE4710. The material shall meet the requirements of ASTM D 3350 and shall have a minimum cell classification of PE445574.

B. The material shall have a minimum Hydrostatic Design Basis (HDB) of 1000 psi at 73 degrees F.

C. All materials which come in contact with water, including lubricants, shall be evaluated, tested, and certified for conformance with ANSI/NSF Standard 61.

2.02 PIPE

A. All pipe and fittings shall be manufactured in ductile iron pipe sizes (DIPS) only in accordance with AWWA C906.

B. The pipe shall contain no recycled compound except for rework material generated in the manufacturer's own plant that has the same cell classification as the material to which it is being added. The pipe shall be homogeneous throughout and free of visible cracks, holes, voids, foreign inclusions, or other defects that may affect the wall integrity.

C. Permanent identification of water piping service shall be provided by co-extruding longitudinal blue stripes into the pipe outside surface. The striping material shall be the same material as the pipe material except for color. Stripes printed or painted on the outside surface shall not be acceptable.

D. The nominal pipe diameter is specified on the contract drawings. The DR (dimension ratio) and the pressure rating of the pipe and fittings shall be HDPE Pressure Rating 200, DR 11 at 80 degrees F.

2.03 FITTINGS

A. Plain end butt fused fittings and electrofusion couplings shall be used when joining polyethylene materials.

B. Fittings shall have a pressure rating equal to the pipe unless otherwise specified in the plans.

C. All fittings for 4 inch through 12 inch pipe, must be molded if a molded fitting is available including all 45 and 90 degree elbows and tees. Markings for molded fittings shall comply with the requirements of ASTM D 3261. If a molded fitting is not available, fabricated fittings may be used.

Fabricated fittings shall be marked in accordance with ASTM F 2206. All fabricated fittings must be pressure tested at 3 times the working pressure for a period of 5 minutes without failure. Proof of pressure testing must be submitted with the shop drawings. All fabricated fittings must be rated for 200 psi working pressure. The ENGINEER reserves the right to reject any fabricated fittings made with poor quality workmanship or of questionable pressure rating. 90 degree bends shall be fabricated from a minimum of 5 mitered segments. 45 degree bends shall be fabricated from a minimum of 3 mitered segments. Tees shall be fabricated from a minimum of 3 mitered segments.

D. Fittings requiring thrust blocks shall have a flex restraint device installed on the fitting by electrofusion.

E. The fittings shall contain no recycled compound except for rework material generated in the manufacturer's own plant that has the same cell classification as the material to which it is being added. The fittings shall be homogeneous throughout and free of visible cracks, holes, voids, foreign inclusions, or other defects that may affect the wall integrity.

F. Butt fusion fittings shall comply with ASTM D3261.

G. Electrofusion fittings shall comply with ASTM F1055.

2.04 HDPE MJ ADAPTERS

A. The adapter shall comply with AWWA C906 and be manufactured for use on pipe conforming to this specification. Adapters shall have a pressure rating equal to the pipe unless otherwise specified on the plans. The adapter shall be sized for use with ductile iron pipe size HDPE pipe and compatible for heat fusion with pipe conforming to this specification. Adapters shall be

used for all transitions from HDPE to valves, hydrants, or ductile iron pipe and fittings. Hand beveling or tapering of MJ adaptors in the field will not be allowed. HDPE pipe stiffeners shall be used with all MJ adaptors.

B. Mechanical fittings shall be protected from corrosion by bituminous coating in accordance with ANSI/AWWA C151/A21.51. All bolts are to receive (2) coats of bituminous paint or each end of threaded rod may be fitted with a sacrificial zinc anode cap.

2.05 TRANSITION COUPLINGS

A. Transition couplings shall be used only when joining polyethylene materials to different piping materials.

B. Transition couplings used with polyethylene pipe shall be specifically designed for, or tested and found to be acceptable for, use with polyethylene pipe.

C. The transition couplings shall be Alpha Restrained Couplings by Romac. Transition couplings on HDPE pipe shall only be used where approved by the Engineer. Couplings shall be provided with pipe stiffeners.

D. HDPE pipe stiffeners shall also be provided and installed to prevent compression of the HDPE pipe. Stiffeners shall be designed to prevent over insertion.

E. Unrestrained transition couplings shall be restrained to the nearest MJ valve or fitting with tie rods as per Drawing details. Friction clamps shall not be installed on HDPE pipe. All bolts and tie rods are to receive (2) coats of bituminous paint.

2.06 SERVICE CONNECTIONS

A. Electrofusion transition service saddle with threaded brass outlet shall be used for 3/4" and 1" service lines off mains up to 12" in diameter. Saddles shall conform to the requirements for DIPS HDPE pipe and fittings as specified herein. Saddles conforming to IPS HDPE pipe shall not be acceptable. The electro fusion transition service saddles shall be suitable for the installation of corporation stops.

B. Full sleeve stainless steel service saddles/tapping sleeves shall be used for service lines off mains greater than 12" in diameter. All hardware used with the sleeves shall be stainless steel.

2.07 TRACER WIRE

A. Tracer or location wire shall be a direct burial #12 AWG Solid (.0808" diameter), 21% conductivity annealed copper-clad high carbon steel strength tracer wire, 380# average tensile break load, 30 mil. High

molecular weight-high density blue polyethylene jacket complying with ASTM D1248, 30 volt rating. The wire shall be contiguous except at test stations, valve boxes, and where splicing is required. All splices shall be encased with a 3M-Gel Pack model No. 054007-09053. Wire insulation shall be highly resistant to alkalis, acid and other destructive agents found in soil. Location wire shall be from Copperhead Industries, LLC, part number 1230B-HS or approved equal.

B. Tracer wire shall be installed simultaneously with HDPE pipe. Wire shall be taped to the pipe at 10 foot minimum intervals before installation.

C. Tracer wire to be terminated at each end of the crossing within a valve box.

D. Electronic markers shall also be buried above the HDPE pipe during backfill. Markers shall be placed at a minimum of every 20 linear feet. Markers shall be Omni Marker Model Water - 161 by Greenlee (145.7 kHz frequency).

2.08 ACCEPTABLE MANUFACTURERS

HDPE pipe shall be manufactured by JM Eagle, Performance Pipe or equal. HDPE fittings, adapters and saddles shall be manufactured by George Fischer Central Plastic, ISCO Industries or approved equal.

PART 3: EXECUTION

3.01 PACKAGING, HANDLING, AND STORAGE

A. The manufacturer shall ensure that the interior of all pipe is clean and install plastic cleanliness plugs in all pipes to keep the pipe interiors clean. The manufacturer shall package the pipe in a manner designed to ensure that it arrives at the project neat, clean, intact, and without physical damage. The transportation carrier shall use appropriate methods and intermittent checks to assure that the pipe is properly supported, stacked, and restrained during transport such that the pipe is not nicked, gouged, or physically damaged.

B. Pipe shall be stored on clean, level ground to prevent undue scratching or gouging. If the pipe must be stacked for storage, such stacking shall be done in accordance with the pipe manufacturer's recommendations. The pipe shall be handled in such a manner that it is not pulled over sharp objects or cut by chokers or lifting equipment. Do not use chains, wire rope, forklifts or other methods or equipment that may gouge or damage the pipe.

C. Sections of pipe having been discovered with cuts or gouges in excess of 10% of the pipe wall thickness shall be cut out and removed. The undamaged portions of the pipe shall be rejoined by butt fusing or the use of electrofusion fittings.

3.02 EXCAVATION AND TRENCH CONSTRUCTION

A. Research has documented that certain pipe materials (such as polyethylene, polybutylene, polyvinyl chloride, and asbestos cement) and elastomers, such as used in jointing gaskets and packing glands, may be subject to permeation by lower molecular weight organic solvents or petroleum products. Products supplied under this Specification Section assume that petroleum products or organic solvents will not be encountered. If during the course of pipeline installation the Contractor identifies, or suspects the presence of petroleum products or any unknown chemical substance, notify the ENGINEER immediately. Stop installing piping in the area of suspected contamination until direction is provided by the ENGINEER.

B. Trenching shall be performed in accordance with ASTM D2774.

C. Embedment materials shall be in accordance with ASTM D2321.

D. Requirements for backfill and bedding for HDPE mains shall be as shown on the Drawings and specified in Section 02200 – Earthwork.

E. Minimum trench width at pipe depth shall be 18 inches or 12 inches greater than the pipe diameter whichever is greater. Trench width to be wide enough to accommodate backfill compaction equipment. Maximum trench width at the top of the pipe shall be 24 inches greater than the pipe diameter.

F. Provide trench depth necessary to maintain required minimum depth of cover. The depth of cover shall be measured from the finished grade to the top of the pipe barrel.

G. Proceed with trench excavation in advance of pipe installation only as far as can be backfilled the same day.

H. Stockpile excavated material such that it will not obstruct work, sidewalks, driveways, hydrants, valve-pit covers, valve boxes, curb-stop boxes, fire and police-call boxes or other utility controls, or endanger personnel or the public.

I. Unless otherwise specified, blasting of rock is prohibited.

J. Comply with all federal, state, and local regulations for the protection of workers and the safety of the general public.

3.03 PIPE INSTALLATION

A. Inspect pipe and appurtenances for defects prior to installation in the trench. Set aside defective, damaged or unsound material and hold material for inspection by the ENGINEER.

B. Remove all dirt and foreign matter from pipe before lowering into the trench. Do not place debris, hand tools, clothing or other materials in the pipe. Keep pipe clean during and after laying.

C. Provide proper equipment, tools, and facilities for safe execution of work. A nylon fabric choker sling capable of safely handling the weight of the pipe or fitting shall be used to lift, place, and move pipe and fittings.

D. Maximum pipe bending radius shall be in conformance with the manufacturer's recommendation for the specific diameter and dimension ratio (DR) of the pipe. HDPE pipe shall only be deflected upon approval of the ENGINEER, unless otherwise shown on the Contract Drawings.

E. During periods of work stoppage and at the end of work each day, seal pipe ends to prevent the entry of water, debris, small animals, and other types of contamination. Prevent flotation of sealed pipe during work stoppages.

3.04 PIPE AND FITTING JOINING

A. Qualifications

a. Contractors and their personnel conducting and performing HDPE pipe fusions in the field must be formally trained and have experience related to the pipe size and equipment required for the job. The Contractor must have experience with the type of fusion being conducted and knowledge of best handling practices used in the field to reduce potential damage or future problems related to the installation. The Contractor must have managed two or more similar HDPE fusion project within the last 36 months.

b. Qualification of the fusion technician shall be demonstrated by proof of qualification within the last 24 months via a manufacturer's recognized training facility and/or program. The qualified fusion technician shall have 1) received training in heat fusion procedures according to ASTM F2620 for Butt Fusion and ASTM F1055 for Electrofusion, 2) received training in the equipment being used to perform fusion procedures and for the pipe sizes utilized shown in the Contract Drawings, 3) received training in handling and testing methods, 4) understands the effects of changing conditions in the surrounding environments and adjust or check fusion parameters to avoid negative impacts on the fusions, and 5) have documented prior experience (data logs) in performing HDPE pipe installations, heat fusion procedures, and testing methods. The Contractor shall maintain records of personnel training and experience and said records shall be made available for inspections.

B. Butt Fusion

a. Butt fusion procedures shall be in accordance with the manufacturer's recommendations. Butt Fusion joints shall be made by qualified fusion

technicians per PPI TN-42 "Recommended Minimum Training Guidelines for PE Pipe Butt Fusion Joining Operators for Municipal and Industrial Projects". The pipe and fittings shall be joined by the butt fusion procedure outlined in ASTM F 2620 or PPI TR-33 "Generic Butt Fusion Joining Procedure for Field Joining of Polyethylene". Surfaces must be clean and dry before joining. The wall thicknesses of the adjoining pipes and fittings shall have the same DR at the point of fusion.

b. Butt fusion equipment shall be equipped with a Datalogger. Records of each weld (including, as a minimum, heater temperature, fusion pressure, and a graph of the fusion cycle) shall be appropriately identified and provided to the ENGINEER.

C. Electrofusion

a. Electrofusion procedures shall be in accordance with the manufacturer's recommendations. Couplings and saddles shall be joined by the electrofusion procedure outlined in ASTM F1055. Surfaces must be clean and dry before joining.

b. Electrofusion reports of each weld shall be appropriately identified and provided to the ENGINEER. The reports shall include, as a minimum, the fusion date, time, ambient temperature, fitting type and size, user ID, and the manufacturer of the part.

D. Transition Couplings

a. Transition Couplings are only permissible when joining polyethylene pipe to unlike materials. HDPE stiffeners shall be utilized with all couplings. Blocking must be provided at changes in direction for any mechanical fittings.

3.05 BACKFILL

A. Backfilling shall immediately follow the pipe-laying operation. Clean sand, as defined in Section 02200, shall be used for pipe embedment backfill. Work backfill material under the sides of the pipe to provide uniform, continuous, and firm haunching. Compact embedment backfill in 6" lifts to 12" above the crown of the pipe. Compact embedment backfill to 95% Standard Proctor Density for trenches under pavements, sidewalks or roads. Compact embedment backfill to at least 90% Standard Proctor Density in locations other then surfaced areas.

B. Place metallic tracing wire, tape, or plastic coated metal strips immediately above the embedment backfill material, directly over the pipe.

C. Final backfill shall be placed in the trench and compacted to finished grade. Backfill materials shall be as shown on the Plans and specified in Section 02200.

D. Compact final backfill to 95% Standard Proctor Density for trenches under pavements, sidewalks or roads. Compact backfill to density of adjacent soils for trenches in locations other than surfaced areas.

E. CONTRACTOR shall provide material required for backfilling the trenches or for filling depressions caused by settlement or washout.

F. Where sand is not specified, backfill material shall have a maximum particle size of 3/4-inch.

3.06 SERVICE CONNECTIONS

A. Service saddles shall be installed by electrofusion in accordance with ASTM F 1055. Surfaces must be clean and dry before joining.

3.08 TESTING AND DISINFECTION

A. Pressure testing shall be conducted in accordance with Section 15030, the Manufacturer's recommended procedure and ASTM F2164. Pressure testing shall use water as the test media. Pneumatic (air) testing is prohibited. Under no circumstances shall HDPE pipe be pressure tested when the temperature of the pipe is above 80 degrees F.

B. Disinfection shall be conducted in accordance with Section 15020 and AWWA C651.

END OF SECTION

SECTION 15131
PIPING SPECIALTIES

PART 1: GENERAL

1.01 SCOPE

This Section covers furnishing and installation of miscellaneous piping specialties as shown on the Drawings or in the Specification Special Conditions or as required to fulfill the intent of the project.

PART 2: PRODUCTS

2.01 FIRE HYDRANTS

Fire hydrants shall be cast iron, bronze mounted, compression type with five and one-Quarter inch (5-1/4") valve opening. Fire hydrants shall be supplied with six inch (6") mechanical joint inlet connections with strapping lug, two (2) each of two and one-half inch (2-1/2") hose nozzle outlets (national standard), and one (1) four and one-half inch (4-1/2") pumper nozzle outlet (national standard). Specific requirements for fire hydrants:

a) The hydrant shall open to the left (counter clockwise) by operation of a one and one-half inch (1-1/2") pentagon operating nut.

b) The hydrant stuffing box shall incorporate "O" ring seals.

c) Asphaltum coatings shall be factory applied on interior surfaces and exterior below ground surfaces. Above ground exterior paint shall be a minimum two (2) factory applied coats of primer and finish paint in fire hydrant red standard.

d) All hydrants shall be supplied with caps and cap chains.

e) Cover or bury shall be four feet (4) unless otherwise specified on the approved plans.

f) Hydrants shall be rated at 150 psi working pressure and tested to 300 psi.

g) Hydrants shall be model A-423 as manufactured by Mueller Company or an approved equal.

2.02 WATER SERVICE LINES

a) Corporation stops shall be Mueller Company type H-15008N compression style or approved equal with Mueller inlet thread.

b) Curb stops shall be Mueller Company type H-15209 Mark II Oriseal compression style or approved equal.

c) Curb boxes shall be cast iron and one of two types:

1) A telescopic type with lid. Inside diameter of the upper section shall be at least one and one-quarter inch (1-1/4"). Curb stop boxes shall be coated inside and out with a tar or asphalt compound and shall be of a sufficient length to properly envelop the curb stop key and meet surface grade with reasonable adjustable allowance for future raising or lowering of grade. Additional extension sections other than described shall not be permitted. Curb stop boxes shall be Mueller Company type H-10386 Oriseal with foot piece or approved equal.

2) A screw adjusted type with lid, buffalo patterned, and adjustable to such height and length as required. Inside diameter of two and one-half inches (2-1/2"), and shall be coated inside and out with tar or asphalt compound. Additional riser sections shall not be permitted.

d) All curb stops shall be supplied with 304 Stainless Steel stationary rods.

e) Separate curb stop box may be omitted if installed in a curb meter pit or box, where applicable, and approved by the Engineer and/or OWNER.

f) Curb stops shall not be installed in driveways and sidewalks, nor shall they be obstructed by the placement of materials that may hinder access, operation, or repair (ie., mailbox, trees and shrubs, fencing and so on).

2.03 RODS, BOLTS, LUGS AND BRACKETS

All steel rods, bolts, lugs and brackets shall be ASTM A36 or A-307 carbon steel as a minimum requirement. After field installation all steel surfaces shall have one coat of Koppers #50 coal tar coating applied before backfill.

2.04 RETAINING GLANDS

All retaining glands shall be ductile iron with ductile iron set screws. Pressure ratings for use with ductile iron pipe shall be 250 psi.

PART 3: EXECUTION

3.01 INSTALLATION

See pipe installation specifications for general installation.

SECTION 15155

GATE VALVES

PART 1: GENERAL

1.01 SCOPE

The CONTRACTOR shall furnish and install all gate valves shown on the drawings.

1.02 RELATED WORK

Specification Section 15000 - Piping - General Provisions.

PART 2: PRODUCTS

2.01 GATE VALVES

Gate valves shall be iron body, inside screw, fully bronze mounted, conforming with the requirements of AWWA C509, Resilient-Seated Gate Valves for Water Supply Service. There shall be a resilient rubber seat ring mounted to the valve disc with stainless steel screws. The rubber ring shall seat against a machined surface of the valve body.

Direction of valve opening and size of operation nut shall be in accordance with the East Windsor Municipal Utilities Authority standards. An arrow showing the direction of opening and the word "OPEN" shall be cast on the flange of the operating nut. Valves in sizes 3-inch to 12-inch shall be suitable for water working pressures to 250 psi (Valves shall open counter - clockwise).

Valves in sizes 3-inch to 12-inch shall be vertical and shall be provided with mechanical joint ends.

Lubrication instructions and parts lists shall be furnished for each type and manufacture.

Valves shall be Resilient Seat Gate Valves, Model No. A-2360-20 as manufactured by the Mueller Company or approved equal.

2.02 Valve Boxes

Each buried valve shall be provided with a cast iron, two-piece, slide type valve box. Valve boxes shall be 5-1/4 inch shaft with a round base and shall be

provided with extra deep covers with the word "WATER" cast on and an arrow indicating direction of opening.

Length of valve boxes and size of base shall be to suit each particular installation and shall have about eight inches of adjustment up and down available after setting to grade.

Valve boxes shall be as manufactured by Tyler Company or approved equal.

2.03 EXTENSION STEMS

Extension stems shall be stainless steel. Stems shall be of a suitable size to provide for the operation of the associated valve under all conditions. The lower end of the stem shall be fitted with a socket to fit over the valve operating nut. The upper end shall be fitted with a 2-inch square operating nut. Attachment of socket and nut to the extension stem and socket to valve nut shall be with stainless steel pins. Set screws will not acceptable. Approved stem guides shall be provided where required and shall be bronze bushed. Guides shall be spaced at distances not exceeding 8' on centers. Extension stems shall be provided for buried valves with operating nuts 6 (six) feet and greater, and shall bring the operating nut to a depth of 4 (four) feet, as measured from finished grade.

PART 3: EXECUTION

3.01 INSTALLATION

Valves shall be set truly plumb with valve boxes directly over the valves. After being correctly positioned for line and grade, earth fill shall be carefully tamped around the valve box. Top of box shall be flush with in grassed or earth areas. Jointing of pipe to valve shall conform to details shown in the Contract Drawings.

*****

APPENDIX A

AMERICAN IRON AND STEEL REQUIREMENTS

UNITED STATES ENVIRONMENTAL PROTECTION AGENCY
WASHINGTON, D.C. 20460

MAR 2 0 2014

OFFICE OF WATER

MEMORANDUM

SUBJECT: Implementation of American Iron and Steel provisions of P.L. 113-76, Consolidated Appropriations Act, 2014

FROM: For Andrew D. Sawyers, Director
Office of Wastewater Management (4201M)

Peter C. Grevatt, Director
Office of Ground Water and Drinking Water (4601M)

TO: Water Management Division Directors
Regions I - X

P.L. 113-76, Consolidated Appropriations Act, 2014 (Act), includes an "American Iron and Steel (AIS)" requirement in section 436 that requires Clean Water State Revolving Loan Fund (CWSRF) and Drinking Water State Revolving Loan Fund (DWSRF) assistance recipients to use iron and steel products that are produced in the United States for projects for the construction, alteration, maintenance, or repair of a public water system or treatment works if the project is funded through an assistance agreement executed beginning January 17, 2014 (enactment of the Act), through the end of Federal Fiscal Year 2014.

Section 436 also sets forth certain circumstances under which EPA may waive the AIS requirement. Furthermore, the Act specifically exempts projects where engineering plans and specifications were approved by a State agency prior to January 17, 2014.

The approach described below explains how EPA will implement the AIS requirement. The first section is in the form of questions and answers that address the types of projects that must comply with the AIS requirement, the types of products covered by the AIS requirement, and compliance. The second section is a step-by-step process for requesting waivers and the circumstances under which waivers may be granted.

Implementation

The Act states:

Sec. 436. (a)(1) None of the funds made available by a State water pollution control revolving fund as authorized by title VI of the Federal Water Pollution Control Act (33 U.S.C. 1381 et seq.) or made available by a drinking water treatment revolving loan fund as authorized by section 1452 of the Safe Drinking Water Act (42 U.S.C. 300j–12) shall be used for a project for the construction, alteration, maintenance, or repair of a public water system or treatment works unless all of the iron and steel products used in the project are produced in the United States.

(2) In this section, the term ''iron and steel products'' means the following products made primarily of iron or steel: lined or unlined pipes and fittings, manhole covers and other municipal castings, hydrants, tanks, flanges, pipe clamps and restraints, valves, structural steel, reinforced precast concrete, and construction materials.

(b) Subsection (a) shall not apply in any case or category of cases in which the Administrator of the Environmental Protection Agency (in this section referred to as the ''Administrator'') finds that—

(1) applying subsection (a) would be inconsistent with the public interest;

(2) iron and steel products are not produced in the United States in sufficient and reasonably available quantities and of a satisfactory quality; or

(3) inclusion of iron and steel products produced in the United States will increase the cost of the overall project by more than 25 percent.

(c) If the Administrator receives a request for a waiver under this section, the Administrator shall make available to the public on an informal basis a copy of the request and information available to the Administrator concerning the request, and shall allow for informal public input on the request for at least 15 days prior to making a finding based on the request. The Administrator shall make the request and accompanying information available by electronic means, including on the official public Internet Web site of the Environmental Protection Agency.

(d) This section shall be applied in a manner consistent with United States obligations under international agreements.

(e) The Administrator may retain up to 0.25 percent of the funds appropriated in this Act for the Clean and Drinking Water State Revolving Funds for carrying out

the provisions described in subsection (a)(1) for management and oversight of the requirements of this section.

(f) This section does not apply with respect to a project if a State agency approves the engineering plans and specifications for the project, in that agency's capacity to approve such plans and specifications prior to a project requesting bids, prior to the date of the enactment of this Act.

The following questions and answers provide guidance for implementing and complying with the AIS requirements:

Project Coverage

1) What classes of projects are covered by the AIS requirement?

All treatment works projects funded by a CWSRF assistance agreement, and all public water system projects funded by a DWSRF assistance agreement, from the date of enactment through the end of Federal Fiscal Year 2014, are covered. The AIS requirements apply to the entirety of the project, no matter when construction begins or ends. Additionally, the AIS requirements apply to all parts of the project, no matter the source of funding.

2) Does the AIS requirement apply to nonpoint source projects or national estuary projects?

No. Congress did not include an AIS requirement for nonpoint source and national estuary projects unless the project can also be classified as a 'treatment works' as defined by section 212 of the Clean Water Act.

3) Are any projects for the construction, alteration, maintenance, or repair of a public water system or treatment works excluded from the AIS requirement?

Any project, whether a treatment works project or a public water system project, for which engineering plans and specifications were approved by the responsible state agency prior to January 17, 2014, is excluded from the AIS requirements.

4) What if the project does not have approved engineering plans and specifications but has signed an assistance agreement with a CWSRF or DWSRF program prior to January 17, 2014?

The AIS requirements do not apply to any project for which an assistance agreement was signed prior to January 17, 2014.

5) What if the project does not have approved engineering plans and specifications, but bids were advertised prior to January 17, 2014 and an assistance agreement was signed after January 17, 2014?

If the project does not require approved engineering plans and specifications, the bid advertisement date will count in lieu of the approval date for purposes of the exemption in section 436(f).

6) What if the assistance agreement that was signed prior to January 17, 2014, only funded a part of the overall project, where the remainder of the project will be funded later with another SRF loan?

If the original assistance agreement funded any construction of the project, the date of the original assistance agreement counts for purposes of the exemption. If the original assistance agreement was only for planning and design, the date of that assistance agreement will count for purposes of the exemption only if there is a written commitment or expectation on the part of the assistance recipient to fund the remainder of the project with SRF funds.

7) What if the assistance agreement that was signed prior to January 17, 2014, funded the first phase of a multi-phase project, where the remaining phases will be funded by SRF assistance in the future?

In such a case, the phases of the project will be considered a single project if all construction necessary to complete the building or work, regardless of the number of contracts or assistance agreements involved, are closely related in purpose, time and place. However, there are many situations in which major construction activities are clearly undertaken in phases that are distinct in purpose, time, or place. In the case of distinct phases, projects with engineering plans and specifications approval or assistance agreements signed prior to January 17, 2014 would be excluded from AIS requirements while those approved/signed on January 17, 2014, or later would be covered by the AIS requirements.

8) What if a project has split funding from a non-SRF source?

Many States intend to fund projects with "split" funding, from the SRF program and from State or other programs. Based on the Act language in section 436, which requires that American iron and steel products be used in any project for the construction, alteration, maintenance, or repair of a public water system or treatment works receiving SRF funding between and including January 17, 2014 and September 30, 2014, any project that is funded in whole or in part with such funds must comply with the AIS requirement. A "project" consists of all construction necessary to complete the building or work regardless of the number of contracts or assistance agreements involved so long as all contracts and assistance agreements awarded are closely related in purpose, time and place. This precludes the intentional splitting of SRF projects into separate and smaller contracts or assistance agreements to avoid AIS coverage on some portion of a larger

project, particularly where the activities are integrally and proximately related to the whole. However, there are many situations in which major construction activities are clearly undertaken in separate phases that are distinct in purpose, time, or place, in which case, separate contracts or assistance agreement for SRF and State or other funding would carry separate requirements.

9) What about refinancing?

If a project began construction, financed from a non-SRF source, prior to January 17, 2014, but is refinanced through an SRF assistance agreement executed on or after January 17, 2014 and prior to October 1, 2014, AIS requirements will apply to all construction that occurs on or after January 17, 2014, through completion of construction, unless, as is likely, engineering plans and specifications were approved by a responsible state agency prior to January 17, 2014. There is no retroactive application of the AIS requirements where a refinancing occurs for a project that has completed construction prior to January 17, 2014.

10) Do the AIS requirements apply to any other EPA programs, besides the SRF program, such as the Tribal Set-aside grants or grants to the Territories and DC?

No, the AIS requirement only applies to funds made available by a State water pollution control revolving fund as authorized by title VI of the Federal Water Pollution Control Act (33 U.S.C. 1381 et seq.) or made available by a drinking water treatment revolving loan fund as authorized by section 1452 of the Safe Drinking Water Act (42 U.S.C. 300j–12)

Covered Iron and Steel Products

11) What is an iron or steel product?

For purposes of the CWSRF and DWSRF projects that must comply with the AIS requirement, an iron or steel product is one of the following made primarily of iron or steel that is permanently incorporated into the public water system or treatment works:

Lined or unlined pipes or fittings;
Manhole Covers;
Municipal Castings (defined in more detail below);
Hydrants;
Tanks;
Flanges;
Pipe clamps and restraints;
Valves;
Structural steel (defined in more detail below);
Reinforced precast concrete; and
Construction materials (defined in more detail below).

12) What does the term 'primarily iron or steel' mean?

'Primarily iron or steel' places constraints on the list of products above. For one of the listed products to be considered subject to the AIS requirements, it must be made of greater than 50% iron or steel, measured by cost. The cost should be based on the material costs.

13) Can you provide an example of how to perform a cost determination?

For example, the iron portion of a fire hydrant would likely be the bonnet, body and shoe, and the cost then would include the pouring and casting to create those components. The other material costs would include non-iron and steel internal workings of the fire hydrant (i.e., stem, coupling, valve, seals, etc). However, the assembly of the internal workings into the hydrant body would not be included in this cost calculation. If one of the listed products is not made primarily of iron or steel, United States (US) provenance is not required. An exception to this definition is reinforced precast concrete, which is addressed in a later question.

14) If a product is composed of more than 50% iron or steel, but is not listed in the above list of items, must the item be produced in the US? Alternatively, must the iron or steel in such a product be produced in the US?

The answer to both question is no. Only items on the above list must be produced in the US. Additionally, the iron or steel in a non-listed item can be sourced from outside the US.

15) What is the definition of steel?

Steel means an alloy that includes at least 50 percent iron, between .02 and 2 percent carbon, and may include other elements. Metallic elements such as chromium, nickel, molybdenum, manganese, and silicon may be added during the melting of steel for the purpose of enhancing properties such as corrosion resistance, hardness, or strength. The definition of steel covers carbon steel, alloy steel, stainless steel, tool steel and other specialty steels.

16) What does 'produced in the United States' mean?

Production in the United States of the iron or steel products used in the project requires that all manufacturing processes, including application of coatings, must take place in the United States, with the exception of metallurgical processes involving refinement of steel additives. All manufacturing processes includes processes such as melting, refining, forming, rolling, drawing, finishing, fabricating and coating. Further, if a domestic iron and steel product is taken out of the US for any part of the manufacturing process, it becomes foreign source material. However, raw materials such as iron ore, limestone and iron and steel scrap are not covered by the AIS requirement, and the

material(s), if any, being applied as a coating are similarly not covered. Non-iron or steel components of an iron and steel product may come from non-US sources. For example, for products such as valves and hydrants, the individual non-iron and steel components do not have to be of domestic origin.

17) Are the raw materials used in the production of iron or steel required to come from US sources?

No. Raw materials, such as iron ore, limestone, scrap iron, and scrap steel, can come from non-US sources.

18) If an above listed item is primarily made of iron or steel, but is only at the construction site temporarily, must such an item be produced in the US?

No. Only the above listed products made primarily of iron or steel, permanently incorporated into the project must be produced in the US. For example trench boxes, scaffolding or equipment, which are removed from the project site upon completion of the project, are not required to be made of U.S. Iron or Steel.

19) What is the definition of 'municipal castings'?

Municipal castings are cast iron or steel infrastructure products that are melted and cast. They typically provide access, protection, or housing for components incorporated into utility owned drinking water, storm water, wastewater, and surface infrastructure. They are typically made of grey or ductile iron, or steel. Examples of municipal castings are:

Access Hatches;
Ballast Screen;
Benches (Iron or Steel);
Bollards;
Cast Bases;
Cast Iron Hinged Hatches, Square and Rectangular;
Cast Iron Riser Rings;
Catch Basin Inlet;
Cleanout/Monument Boxes;
Construction Covers and Frames;
Curb and Corner Guards;
Curb Openings;
Detectable Warning Plates;
Downspout Shoes (Boot, Inlet);
Drainage Grates, Frames and Curb Inlets;
Inlets;
Junction Boxes;
Lampposts;
Manhole Covers, Rings and Frames, Risers;

Meter Boxes;
Service Boxes;
Steel Hinged Hatches, Square and Rectangular;
Steel Riser Rings;
Trash receptacles;
Tree Grates;
Tree Guards;
Trench Grates; and
Valve Boxes, Covers and Risers.

20) What is 'structural steel'?

Structural steel is rolled flanged shapes, having at least one dimension of their cross-section three inches or greater, which are used in the construction of bridges, buildings, ships, railroad rolling stock, and for numerous other constructional purposes. Such shapes are designated as wide-flange shapes, standard I-beams, channels, angles, tees and zees. Other shapes include H-piles, sheet piling, tie plates, cross ties, and those for other special purposes.

21) What is a 'construction material' for purposes of the AIS requirement?

Construction materials are those articles, materials, or supplies made primarily of iron and steel, that are permanently incorporated into the project, not including mechanical and/or electrical components, equipment and systems. Some of these products may overlap with what is also considered "structural steel". This includes, but is not limited to, the following products: wire rod, bar, angles, concrete reinforcing bar, wire, wire cloth, wire rope and cables, tubing, framing, joists, trusses, fasteners (i.e., nuts and bolts), welding rods, decking, grating, railings, stairs, access ramps, fire escapes, ladders, wall panels, dome structures, roofing, ductwork, surface drains, cable hanging systems, manhole steps, fencing and fence tubing, guardrails, doors, and stationary screens.

22) What is not considered a 'construction material' for purposes of the AIS requirement?

Mechanical and electrical components, equipment and systems are not considered construction materials. Mechanical equipment is typically that which has motorized parts and/or is powered by a motor. Electrical equipment is typically any machine powered by electricity and includes components that are part of the electrical distribution system.

The following examples (including their appurtenances necessary for their intended use and operation) are NOT considered construction materials: pumps, motors, gear reducers, drives (including variable frequency drives (VFDs)), electric/pneumatic/manual accessories used to operate valves (such as electric valve actuators), mixers, gates, motorized screens (such as traveling screens), blowers/aeration equipment, compressors, meters, sensors, controls and switches, supervisory control and

data acquisition (SCADA), membrane bioreactor systems, membrane filtration systems, filters, clarifiers and clarifier mechanisms, rakes, grinders, disinfection systems, presses (including belt presses), conveyors, cranes, HVAC (excluding ductwork), water heaters, heat exchangers, generators, cabinetry and housings (such as electrical boxes/enclosures), lighting fixtures, electrical conduit, emergency life systems, metal office furniture, shelving, laboratory equipment, analytical instrumentation, and dewatering equipment.

23) If the iron or steel is produced in the US, may other steps in the manufacturing process take place outside of the US, such as assembly?

No. Production in the US of the iron or steel used in a listed product requires that all manufacturing processes must take place in the United States, except metallurgical processes involving refinement of steel additives.

24) What processes must occur in the US to be compliant with the AIS requirement for reinforced precast concrete?

While reinforced precast concrete may not be at least 50% iron or steel, in this particular case, the reinforcing bar and wire must be produced in the US and meet the same standards as for any other iron or steel product. Additionally, the casting of the concrete product must take place in the US. The cement and other raw materials used in concrete production are not required to be of domestic origin.

If the reinforced concrete is cast at the construction site, the reinforcing bar and wire are considered to be a construction material and must be produced in the US.

Compliance

25) How should an assistance recipient document compliance with the AIS requirement?

In order to ensure compliance with the AIS requirement, specific AIS contract language must be included in each contract, starting with the assistance agreement, all the way down to the purchase agreements. Sample language for assistance agreements and contracts can be found in Appendix 3 and 4.

EPA recommends the use of a step certification process, similar to one used by the Federal Highway Administration. The step certification process is a method to ensure that producers adhere to the AIS requirement and assistance recipients can verify that products comply with the AIS requirement. The process also establishes accountability and better enables States to take enforcement actions against violators.

Step certification creates a paper trail which documents the location of the manufacturing process involved with the production of steel and iron materials. A step certification is a process under which each handler (supplier, fabricator, manufacturer,

processor, etc) of the iron and steel products certifies that their step in the process was domestically performed. Each time a step in the manufacturing process takes place, the manufacturer delivers its work along with a certification of its origin. A certification can be quite simple. Typically, it includes the name of the manufacturer, the location of the manufacturing facility where the product or process took place (not its headquarters), a description of the product or item being delivered, and a signature by a manufacturer's responsible party. Attached, as Appendix 5, are sample certifications. These certifications should be collected and maintained by assistance recipients.

Alternatively, the final manufacturer that delivers the iron or steel product to the worksite, vendor, or contractor, may provide a certification asserting that all manufacturing processes occurred in the US. While this type of certification may be acceptable, it may not provide the same degree of assurance. Additional documentation may be needed if the certification is lacking important information. Step certification is the best practice.

26) How should a State ensure assistance recipients are complying with the AIS requirement?

In order to ensure compliance with the AIS requirement, States SRF programs must include specific AIS contract language in the assistance agreement. Sample language for assistance agreements can be found in Appendix 3.

States should also, as a best practice, conduct site visits of projects during construction and review documentation demonstrating proof of compliance which the assistance recipient has gathered.

27) What happens if a State or EPA finds a non-compliant iron and/or steel product permanently incorporated in the project?

If a potentially non-compliant product is identified, the State should notify the assistance recipient of the apparent unauthorized use of the non-domestic component, including a proposed corrective action, and should be given the opportunity to reply. If unauthorized use is confirmed, the State can take one or more of the following actions: request a waiver where appropriate; require the removal of the non-domestic item; or withhold payment for all or part of the project. Only EPA can issue waivers to authorize the use of a non-domestic item. EPA may use remedies available to it under the Clean Water Act, the Safe Drinking Water Act, and 40 CFR part 31 grant regulations, in the event of a violation of a grant term and condition.

It is recommended that the State work collaboratively with EPA to determine the appropriate corrective action, especially in cases where the State is the one who identifies the item in noncompliance or there is a disagreement with the assistance recipient.

If fraud, waste, abuse, or any violation of the law is suspected, the Office of Inspector General (OIG) should be contacted immediately. The OIG can be reached at 1-

888-546-8740 or OIG_Hotline@epa.gov. More information can be found at this website: http://www.epa.gov/oig/hotline.htm.

28) How do international trade agreements affect the implementation of the AIS requirements?

The AIS provision applies in a manner consistent with United States obligations under international agreements. Typically, these obligations only apply to direct procurement by the entities that are signatories to such agreements. In general, SRF assistance recipients are not signatories to such agreements, so these agreements have no impact on this AIS provision. In the few instances where such an agreement applies to a municipality, that municipality is under the obligation to determine its applicability and requirements and document the actions taken to comply for the State.

Waiver Process

The statute permits EPA to issue waivers for a case or category of cases where EPA finds (1) that applying these requirements would be inconsistent with the public interest; (2) iron and steel products are not produced in the US in sufficient and reasonably available quantities and of a satisfactory quality; or (3) inclusion of iron and steel products produced in the US will increase the cost of the overall project by more than 25 percent.

In order to implement the AIS requirements, EPA has developed an approach to allow for effective and efficient implementation of the waiver process to allow projects to proceed in a timely manner. The framework described below will allow States, on behalf of the assistance recipients, to apply for waivers of the AIS requirement directly to EPA Headquarters. Only waiver requests received from states will be considered. Pursuant to the Act, EPA has the responsibility to make findings as to the issuance of waivers to the AIS requirements.

Definitions

The following terms are critical to the interpretation and implementation of the AIS requirements and apply to the process described in this memorandum:

Reasonably Available Quantity: The quantity of iron or steel products is available or will be available at the time needed and place needed, and in the proper form or specification as specified in the project plans and design.

Satisfactory Quality: The quality of iron or steel products, as specified in the project plans and designs.

Assistance Recipient: A borrower or grantee that receives funding from a State CWSRF or DWSRF program.

Step-By-Step Waiver Process

Application by Assistance Recipient

Each local entity that receives SRF water infrastructure financial assistance is required by section 436 of the Act to use American made iron and steel products in the construction of its project. However, the recipient may request a waiver. Until a waiver is granted by EPA, the AIS requirement stands, except as noted above with respect to municipalities covered by international agreements.

The waiver process begins with the SRF assistance recipient. In order to fulfill the AIS requirement, the assistance recipient must in good faith design the project (where applicable) and solicit bids for construction with American made iron and steel products. It is essential that the assistance recipient include the AIS terms in any request for proposals or solicitations for bids, and in all contracts (see Appendix 3 for sample construction contract language). The assistance recipient may receive a waiver at any point before, during, or after the bid process, if one or more of three conditions is met:

1. Applying the American Iron and Steel requirements of the Act would be inconsistent with the public interest;
2. Iron and steel products are not produced in the United States in sufficient and reasonably available quantities and of a satisfactory quality; or
3. Inclusion of iron and steel products produced in the United States will increase the cost of the overall project by more than 25 percent.

Proper and sufficient documentation must be provided by the assistance recipient. A checklist detailing the types of information required for a waiver to be processed is attached as Appendix 1.

Additionally, it is strongly encouraged that assistance recipients hold pre-bid conferences with potential bidders. A pre-bid conference can help to identify iron and steel products needed to complete the project as described in the plans and specifications that may not be available from domestic sources. It may also identify the need to seek a waiver prior to bid, and can help inform the recipient on compliance options.

In order to apply for a project waiver, the assistance recipient should email the request in the form of a Word document (.doc) to the State SRF program. It is strongly recommended that the State designate a single person for all AIS communications. The State SRF designee will review the application for the waiver and determine whether the necessary information has been included. Once the waiver application is complete, the State designee will forward the application to either of two email addresses. For CWSRF waiver requests, please send the application to: cwsrfwaiver@epa.gov. For DWSRF waiver requests, please send the application to: dwsrfwaiver@epa.gov.

Evaluation by EPA

After receiving an application for waiver of the AIS requirements, EPA Headquarters will publish the request on its website for 15 days and receive informal comment. EPA Headquarters will then use the checklist in Appendix 2 to determine whether the application properly and adequately documents and justifies the statutory basis cited for the waiver – that it is quantitatively and qualitatively sufficient – and to determine whether or not to grant the waiver.

In the event that EPA finds that adequate documentation and justification has been submitted, the Administrator may grant a waiver to the assistance recipient. EPA will notify the State designee that a waiver request has been approved or denied as soon as such a decision has been made. Granting such a waiver is a three-step process:

1. Posting – After receiving an application for a waiver, EPA is required to publish the application and all material submitted with the application on EPA's website for 15 days. During that period, the public will have the opportunity to review the request and provide informal comment to EPA. The website can be found at: http://water.epa.gov/grants_funding/aisrequirement.cfm

2. Evaluation – After receiving an application for waiver of the AIS requirements, EPA Headquarters will use the checklist in Appendix 2 to determine whether the application properly and adequately documents and justifies the statutory basis cited for the waiver – that it is quantitatively and qualitatively sufficient – and to determine whether or not to grant the waiver.

3. Signature of waiver approval by the Administrator or another agency official with delegated authority – As soon as the waiver is signed and dated, EPA will notify the State SRF program, and post the signed waiver on our website. The assistance recipient should keep a copy of the signed waiver in its project files.

Public Interest Waivers

EPA has the authority to issue public interest waivers. Evaluation of a public interest waiver request may be more complicated than that of other waiver requests so they may take more time than other waiver requests for a decision to be made. An example of a public interest waiver that might be issued could be for a community that has standardized on a particular type or manufacturer of a valve because of its performance to meet their specifications. Switching to an alternative valve may require staff to be trained on the new equipment and additional spare parts would need to be purchased and stocked, existing valves may need to be unnecessarily replaced, and portions of the system may need to be redesigned. Therefore, requiring the community to install an alternative valve would be inconsistent with public interest.

EPA also has the authority to issue a public interest waiver that covers categories of products that might apply to all projects.

EPA reserves the right to issue national waivers that may apply to particular classes of assistance recipients, particular classes of projects, or particular categories of iron or steel products. EPA may develop national or (US geographic) regional categorical waivers through the identification of similar circumstances in the detailed justifications presented to EPA in a waiver request or requests. EPA may issue a national waiver based on policy decisions regarding the public's interest or a determination that a particular item is not produced domestically in reasonably available quantities or of a sufficient quality. In such cases, EPA may determine it is necessary to issue a national waiver.

If you have any questions concerning the contents of this memorandum, you may contact us, or have your staff contact Jordan Dorfman, Attorney-Advisor, State Revolving Fund Branch, Municipal Support Division, at dorfman.jordan@epa.gov or (202) 564-0614 or Kiri Anderer, Environmental Engineer, Infrastructure Branch, Drinking Water Protection Division, at anderer.kirsten@epa.gov or (202) 564-3134.

Attachments

Appendix 1: Information Checklist for Waiver Request

The purpose of this checklist is to help ensure that all appropriate and necessary information is submitted to EPA. EPA recommends that States review this checklist carefully and provide all appropriate information to EPA. This checklist is for informational purposes only and does not need to be included as part of a waiver application.

Items	✓	Notes
General • Waiver request includes the following information: — Description of the foreign and domestic construction materials — Unit of measure — Quantity — Price — Time of delivery or availability — Location of the construction project — Name and address of the proposed supplier — A detailed justification for the use of foreign construction materials • Waiver request was submitted according to the instructions in the memorandum • Assistance recipient made a good faith effort to solicit bids for domestic iron and steel products, as demonstrated by language in requests for proposals, contracts, and communications with the prime contractor		
Cost Waiver Requests • Waiver request includes the following information: — Comparison of overall cost of project with domestic iron and steel products to overall cost of project with foreign iron and steel products — Relevant excerpts from the bid documents used by the contractors to complete the comparison — Supporting documentation indicating that the contractor made a reasonable survey of the market, such as a description of the process for identifying suppliers and a list of contacted suppliers		
Availability Waiver Requests • Waiver request includes the following supporting documentation necessary to demonstrate the availability, quantity, and/or quality of the materials for which the waiver is requested: — Supplier information or pricing information from a reasonable number of domestic suppliers indicating availability/delivery date for construction materials — Documentation of the assistance recipient's efforts to find available domestic sources, such as a description of the process for identifying suppliers and a list of contacted suppliers. — Project schedule — Relevant excerpts from project plans, specifications, and permits indicating the required quantity and quality of construction materials • Waiver request includes a statement from the prime contractor and/or supplier confirming the non-availability of the domestic construction materials for which the waiver is sought • Has the State received other waiver requests for the materials described in this waiver request, for comparable projects?		

Appendix 2: HQ Review Checklist for Waiver Request

Instructions: To be completed by EPA. Review all waiver requests using the questions in the checklist, and mark the appropriate box as Yes, No or N/A. Marks that fall inside the shaded boxes may be grounds for denying the waiver. If none of your review markings fall into a shaded box, the waiver is eligible for approval if it indicates that one or more of the following conditions applies to the domestic product for which the waiver is sought:

1. The iron and/or steel products are not produced in the United States in sufficient and reasonably available quantities and of a satisfactory quality.
2. The inclusion of iron and/or steel products produced in the United States will increase the cost of the overall project by more than 25 percent.

Review Items	Yes	No	N/A	Comments
Cost Waiver Requests				
• Does the waiver request include the following information?				
— Comparison of overall cost of project with domestic iron and steel products to overall cost of project with foreign iron and steel products				
— Relevant excerpts from the bid documents used by the contractors to complete the comparison				
— A sufficient number of bid documents or pricing information from domestic sources to constitute a reasonable survey of the market				
• Does the Total Domestic Project exceed the Total Foreign Project Cost by more than 25%?				
Availability Waiver Requests				
• Does the waiver request include supporting documentation sufficient to show the availability, quantity, and/or quality of the iron and/or steel product for which the waiver is requested?				
— Supplier information or other documentation indicating availability/delivery date for materials				
— Project schedule				
— Relevant excerpts from project plans, specifications, and permits indicating the required quantity and quality of materials				
• Does supporting documentation provide sufficient evidence that the contractors made a reasonable effort to locate domestic suppliers of materials, such as a description of the process for identifying suppliers and a list of contacted suppliers?				
• Based on the materials delivery/availability date indicated in the supporting documentation, will the materials be unavailable when they are needed according to the project schedule? (By item, list schedule date and domestic delivery quote date or other relevant information)				
• Is EPA aware of any other evidence indicating the non-availability of the materials for which the waiver is requested? Examples include:				
— Multiple waiver requests for the materials described in this waiver request, for comparable projects in the same State				
— Multiple waiver requests for the materials described in this waiver request, for comparable projects in other States				
— Correspondence with construction trade associations indicating the non-availability of the materials				
• Are the available domestic materials indicated in the bid documents of inadequate quality compared those required by the project plans, specifications, and/or permits?				

Appendix 3: Example Loan Agreement Language

ALL ASSISTANCE AGREEMENT MUST HAVE A CLAUSE REQUIRING COMPLIANCE WITH THE AIS REQUIREMENT. THIS IS AN EXAMPLE OF WHAT COULD BE INCLUDED IN SRF ASSISTANCE AGREEMENTS. EPA MAKES NO CLAIMS REGARDING THE LEGALITY OF THIS CLAUSE WITH RESPECT TO STATE LAW:

Comply with all federal requirements applicable to the Loan (including those imposed by the 2014 Appropriations Act and related SRF Policy Guidelines) which the Participant understands includes, among other, requirements that all of the iron and steel products used in the Project are to be produced in the United States ("American Iron and Steel Requirement") unless (i) the Participant has requested and obtained a waiver from the Agency pertaining to the Project or (ii) the Finance Authority has otherwise advised the Participant in writing that the American Iron and Steel Requirement is not applicable to the Project.

Comply with all record keeping and reporting requirements under the Clean Water Act/Safe Drinking Water Act, including any reports required by a Federal agency or the Finance Authority such as performance indicators of program deliverables, information on costs and project progress. The Participant understands that (i) each contract and subcontract related to the Project is subject to audit by appropriate federal and state entities and (ii) failure to comply with the Clean Water Act/Safe Drinking Water Act and this Agreement may be a default hereunder that results in a repayment of the Loan in advance of the maturity of the Bonds and/or other remedial actions.

Appendix 4: Sample Construction Contract Language

ALL CONTRACTS MUST HAVE A CLAUSE REQUIRING COMPLIANCE WITH THE AIS REQUIREMENT. THIS IS AN EXAMPLE OF WHAT COULD BE INCLUDED IN ALL CONTRACTS IN PROJECTS THAT USE SRF FUNDS. EPA MAKES NO CLAIMS REGARDING THE LEGALITY OF THIS CLAUSE WITH RESPECT TO STATE OR LOCAL LAW:

The Contractor acknowledges to and for the benefit of the City of _____ ("Purchaser") and the _____ (the "State") that it understands the goods and services under this Agreement are being funded with monies made available by the Clean Water State Revolving Fund and/or Drinking Water State Revolving Fund that have statutory requirements commonly known as "American Iron and Steel;" that requires all of the iron and steel products used in the project to be produced in the United States ("American Iron and Steel Requirement") including iron and steel products provided by the Contactor pursuant to this Agreement. The Contractor hereby represents and warrants to and for the benefit of the Purchaser and the State that (a) the Contractor has reviewed and understands the American Iron and Steel Requirement, (b) all of the iron and steel products used in the project will be and/or have been produced in the United States in a manner that complies with the American Iron and Steel Requirement, unless a waiver of the requirement is approved, and (c) the Contractor will provide any further verified information, certification or assurance of compliance with this paragraph, or information necessary to support a waiver of the American Iron and Steel Requirement, as may be requested by the Purchaser or the State. Notwithstanding any other provision of this Agreement, any failure to comply with this paragraph by the Contractor shall permit the Purchaser or State to recover as damages against the Contractor any loss, expense, or cost (including without limitation attorney's fees) incurred by the Purchaser or State resulting from any such failure (including without limitation any impairment or loss of funding, whether in whole or in part, from the State or any damages owed to the State by the Purchaser). While the Contractor has no direct contractual privity with the State, as a lender to the Purchaser for the funding of its project, the Purchaser and the Contractor agree that the State is a third-party beneficiary and neither this paragraph (nor any other provision of this Agreement necessary to give this paragraph force or effect) shall be amended or waived without the prior written consent of the State.

Appendix 5: Sample Certifications

The following information is provided as a sample letter of **step** certification for AIS compliance. Documentation must be provided on company letterhead.

Date

Company Name

Company Address

City, State Zip

Subject: American Iron and Steel Step Certification for Project (XXXXXXXXXX)

I, (company representative), certify that the (melting, bending, coating, galvanizing, cutting, etc.) process for (manufacturing or fabricating) the following products and/or materials shipped or provided for the subject project is in full compliance with the American Iron and Steel requirement as mandated in EPA's State Revolving Fund Programs.

Item, Products and/or Materials:

1. Xxxx
2. Xxxx
3. Xxxx

Such process took place at the following location:

_____

If any of the above compliance statements change while providing material to this project we will immediately notify the prime contractor and the engineer.

Signed by company representative

The following information is provided as a sample letter of certification for AIS compliance. Documentation must be provided on company letterhead.

Date

Company Name

Company Address

City, State Zip

Subject: American Iron and Steel Certification for Project (XXXXXXXXXX)

I, (company representative), certify that the following products and/or materials shipped/provided to the subject project are in full compliance with the American Iron and Steel requirement as mandated in EPA's State Revolving Fund Programs.

Item, Products and/or Materials:

1. Xxxx
2. Xxxx
3. Xxxx

Such process took place at the following location:

_____

If any of the above compliance statements change while providing material to this project we will immediately notify the prime contractor and the engineer.

Signed by company representative